RYOBI®

ORIGINAL INSTRUCTIONS

18V Glue Gun

R18GLU

Important!

This appliance is not intended to be used or cleaned by persons with reduced physical, sensory or mental capabilities, or lack of experience or knowledge, unless they have been given instructions concerning the safe use of the appliance by a person legally responsible for their safety. They should be supervised whilst using the appliance.

Children shall not use, clean or play with this appliance, which when not in use should be secured out of their reach.

Safety, performance, and dependability have been given top priority in the design of your glue gun.

INTENDED USE

The glue gun is intended to be used only by adults who have read and understood the instructions and warnings in this manual, and can be considered responsible for their actions.

The product is intended for applying hot glue adhesives.

Do not use the product in any way other than those stated for intended use.

GLUE GUN SAFETY WARNINGS

- Know your glue gun. Read operator's manual carefully. Learn its applications and limitations, as well as the specific potential hazards related to this product. Following this rule will reduce the risk of electric shock, fire, or serious injury.
- **Always wear eye protection with side shields marked to comply with AS/NZS 1336 when assembling parts, operating the product, or performing maintenance.** Following this rule will reduce the risk of serious personal injury.
- **Do not lay a hot glue gun on its side.**
- **Place a piece of paper or cardboard underneath the product to catch hot glue drips and prevent damage to the underlying surface.**
- **Do not touch the heated nozzle of the glue gun.**
- **Use the glue gun in a well-ventilated area to avoid breathing hot glue vapors.**
- **Do not point the nozzle of the glue gun at another person.**
- **Do not tilt the glue gun nozzle upwards or use the product to glue overhead items.**
- **Always allow hot glue to cool and dry completely before handling the item to which it is applied.**
- **Do not insert anything except glue sticks into this product, and insert only from the back of the glue gun.**
- **Do not place your hands or fingers near the nozzle of the glue gun when inserting a new glue stick.**
- **Never leave the glue gun unattended while it is in the on position.**
- **Do not apply more hot glue than it is needed for your application.**
- **Keep work area clean and well lit.** Cluttered or dark areas invite accidents.
- **Do not operate battery products in explosive atmospheres, such as in the presence of flammable liquids, gases or dust.** Battery products create sparks which may ignite the dust or fumes.
- **Keep children and bystanders away while operating a glue gun.** Distractions can cause you to lose control.
- **Do not allow children to use the glue gun.** It is not a toy.
- **Avoid body contact with earthed or grounded surfaces such as pipes, radiators, ranges and refrigerators. There is an increased risk of electric shock if your body is earthed or grounded.**
- **Do not expose battery products to rain or wet conditions. Water entering a battery product will increase the risk of electric shock.**
- **Stay alert, watch what you are doing and use common sense when operating a battery product. Do not use the product while you are tired or under the influence of drugs, alcohol or medication.** A moment of inattention while operating battery products may result in serious personal injury.
- **Prevent unintentional starting. Ensure the switch is in the off position before connecting to power source and/or battery pack, picking up or carrying the product.** Carrying battery products with your finger on the switch or energizing battery products that have the switch on invites accidents.
- **Do not overreach. Keep proper footing and balance at all times. Do not use on a ladder or unstable support.** This enables better control of the battery product in unexpected situations.
- **Do not wear loose clothing or jewelry. Contain long hair.** Loose clothes, jewelry, or long hair can contact a heated nozzle.
- **Do not use the battery product if the switch does not turn it on and off.** Any battery product that cannot be controlled with the switch is dangerous and must be repaired.
- **Remove the battery pack from the product before making any adjustments, changing accessories, or storing the product.** Such preventive safety measures reduce the risk of starting the product accidentally.
- **Store idle products out of the reach of children and do not allow persons unfamiliar with the product or these instructions to operate the product.** Battery products are dangerous in the hands of untrained users.
- **Maintain battery products. Check for misalignment or binding of moving parts, breakage of parts and any other condition that may affect the product's operation. If damaged, have the product repaired before use.** Many accidents are caused by poorly maintained battery products.
- **Use the battery product, accessories and tool bits etc. in accordance with these instructions, taking into account the working conditions and**

the work to be performed. Use of the product for operations different from those intended could result in a hazardous situation.

- **Recharge only with the charger specified by the manufacturer.** A charger that is suitable for one type of battery pack may create a risk of fire when used with another battery pack.
- **Use battery products only with specifically designated battery packs.** Use of any other battery packs may create a risk of injury and fire.
- **When battery pack is not in use, keep it away from other metal objects, like paper clips, coins, keys, nails, screws or other small metal objects, that can make a connection from one terminal to another.** Shorting the battery terminals together may cause burns or a fire.
- **Under abusive conditions, liquid may be ejected from the battery; avoid contact. If contact accidentally occurs, flush with water. If liquid contacts eyes, additionally seek medical help.** Liquid ejected from the battery may cause irritation or burns.
- **Battery products do not have to be plugged into an electrical outlet; therefore, they are always in operating condition. Be aware of possible hazards when not using your battery product or when changing accessories.** Following this rule will reduce the risk of electric shock, fire, or serious personal injury.
- **Do not place battery products or their batteries near fire or heat.** This will reduce the risk of explosion and possibly injury.
- **Do not crush, drop or damage battery pack. Do not use a battery pack or charger that has been dropped or received a sharp blow. A damaged battery is subject to explosion.** Properly dispose of a dropped or damaged battery immediately.
- **Batteries can explode in the presence of a source of ignition, such as a pilot light.** To reduce the risk of serious personal injury, never use any cordless product in the presence of open flame. An exploded battery can propel debris and chemicals. If exposed, flush with water immediately.
- **Do not charge battery product in a damp or wet location.** Following this rule will reduce the risk of electric shock.
- **For best results, your battery product should be charged in a location where the temperature is more than 10°C but less than 38°C.** To reduce the risk of serious personal injury, do not store outside or in vehicles.
- **Under extreme usage or temperature conditions, battery leakage may occur. If liquid comes in contact with your skin, wash immediately with soap and water. If liquid gets into your eyes, flush them with clean water for at least 10 minutes, then seek immediate medical attention.** Following this rule will reduce the risk of serious personal injury.
- **Have your battery product serviced by a qualified repair person using only identical replacement parts.** This will ensure that the safety of the battery product is maintained.
- **When servicing a battery product, use only identical replacement parts. Follow instructions in the Maintenance section of this manual.** Use of unauthorized parts or failure to follow Maintenance instructions may create a risk of shock or injury.
- **Save these instructions.** Refer to them frequently and use them to instruct others who may use this tool. If you loan someone this tool, loan them these instructions also.

ADDITIONAL SAFEY WARNINGS

- Do not allow familiarity with this product to make you careless. Remember that a careless fraction of a second is sufficient to inflict serious injury.
- Always remove battery pack from the tool when you are assembling parts, making adjustments, cleaning, or when not in use. Removing battery pack will prevent accidental starting that could cause serious personal injury.
- Do not use any attachments or accessories not recommended by the manufacturer of this product. The use of attachments or accessories not recommended can result in serious personal injury.
- Battery tools are always in operating condition. Place the switch in the off (O) position and remove the battery pack when the product is not in use or when carrying at your side.
- Always place the glue gun so that nozzle does not come in contact with anything while it is heating or when not in use. Following this rule will reduce the risk of damage to items, burns, fire, or serious personal injury.
- Use caution when applying hot glue to thin or porous material. The underlying surface could be damaged or glue could adhere to the surface and be difficult to remove.
- Do not force the trigger when applying hot glue. This could damage the glue gun. Use a test piece of material to make sure the glue has melted enough to flow without forcing.
- Do not use your fingers to press down on an object to which hot glue has just been applied. This can cause hot glue to escape from the edges or heat up the bonding surface and possibly cause burns or damage to surrounding objects.
- Allow glue to dry completely before moving your work to ensure proper adhesion and reduce the risk of burns.
- If applying glue to very small objects, use tweezers or

tongs to avoid getting the nozzle close to your fingers.

- Allow the glue stick and glue gun nozzle to completely cool before removing the battery pack.

TRANSPORTING LITHIUM BATTERIES

Transport the battery in accordance with local and national provisions and regulations.

Follow all special requirements on packaging and labelling when transporting batteries by a third party. Ensure that no batteries can come in contact with other batteries or conductive materials while in transport by protecting exposed connectors with insulating, non-conductive caps or tape. Do not transport batteries that are cracked or leaking. Check with the forwarding company for further advice.

KNOW YOUR PRODUCT

See page 5.

1. Nozzle
2. Glue stick chamber
3. LED on/off indicator
4. On/Off switch
5. Switch trigger
6. Battery port
7. Glue stick

MAINTENANCE

⚠ WARNING

The product should never be connected to a power supply when assembling parts, making adjustments, cleaning, performing maintenance, or when the product is not in use. Disconnecting the product will prevent accidental starting that could cause serious injury.

- When servicing, use only identical replacement parts. Use of any other parts may create a hazard or cause product damage.
- Avoid using solvents when cleaning plastic parts. Most plastics are susceptible to various types of commercial solvents and may be damaged by their use. Use clean cloths to remove dirt and carbon dust.
- Do not, at any time, let brake fluids, gasoline, petroleum-based products, penetrating oils, etc., come in contact with plastic parts. They contain chemicals that can damage, weaken, or destroy plastic.
- Always wear safety goggles or safety glasses with side shields during power tool operation or when blowing dust. If operation is dusty, also wear a dust mask.
- For greater safety and reliability, all repairs should be performed by an authorised service centre.

ENVIRONMENTAL PROTECTION

Recycle raw materials instead of disposing of as waste. The machine, accessories, and packaging should be sorted for environment-friendly recycling.

SYMBOLS

Safety alert

Regulatory Compliance Mark (RCM). Product meets applicable regulatory requirements.

Please read the instructions carefully before starting the machine.

V Volts

⎓ Direct current

To reduce the risk of injury or damage, avoid contact with any hot surface.

Hot surface

Waste electrical products should not be disposed of with household waste. Please recycle where facilities exist. Check with your local authority or retailer for recycling advice.

SYMBOLS IN THIS MANUAL

Note

Waiting time

The following signal words and meanings are intended to explain the levels of risk associated with this product:

⚠ **DANGER**

Indicates an imminently hazardous situation, which, if not avoided, will result in death or serious injury.

⚠ **WARNING**

Indicates a potentially hazardous situation, which, if not avoided, could result in death or serious injury.

⚠ **CAUTION**

Indicates a potentially hazardous situation, which, if not avoided, may result in minor or moderate injury.

CAUTION

(Without Safety Alert Symbol) Indicates a situation that may result in property damage.

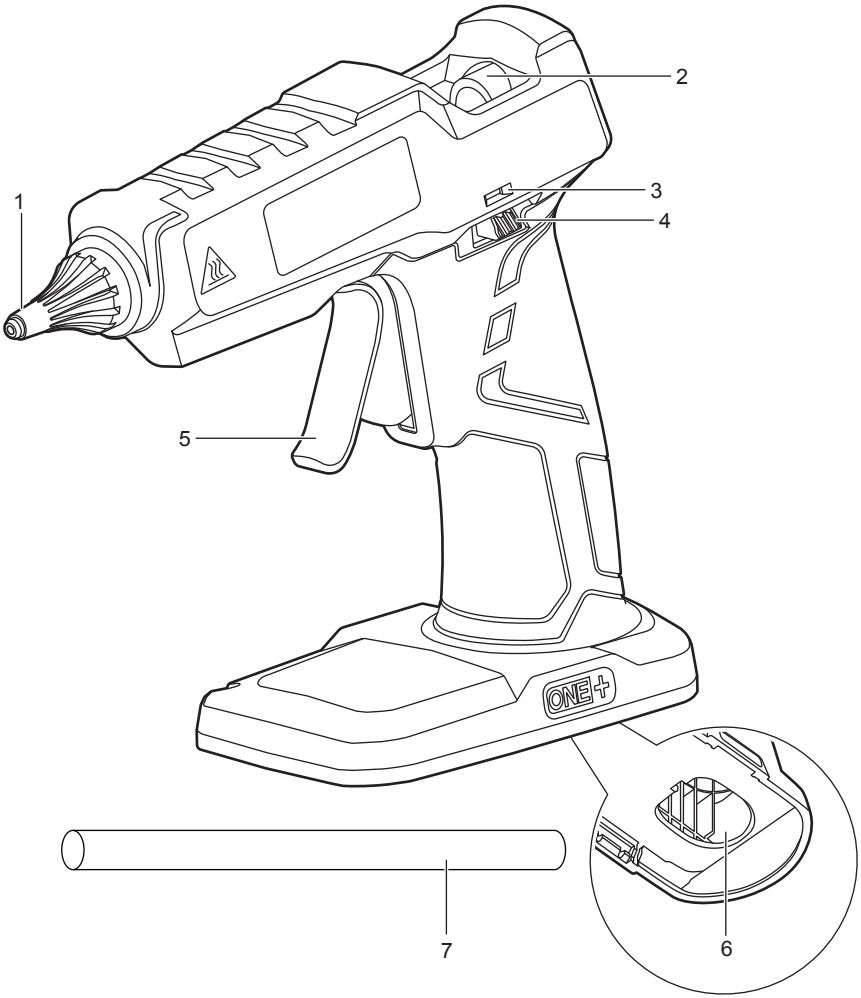
1
2
3
4
5
6
7
ONE+

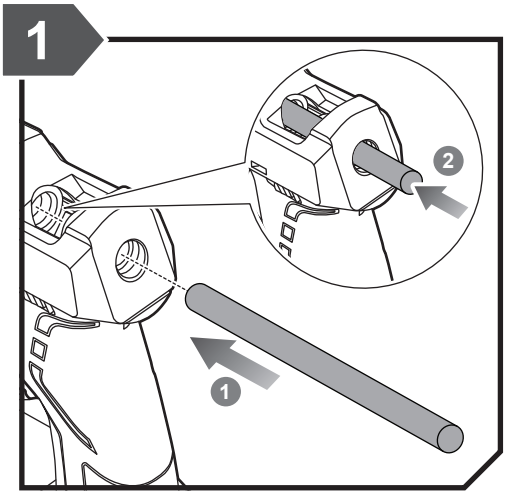

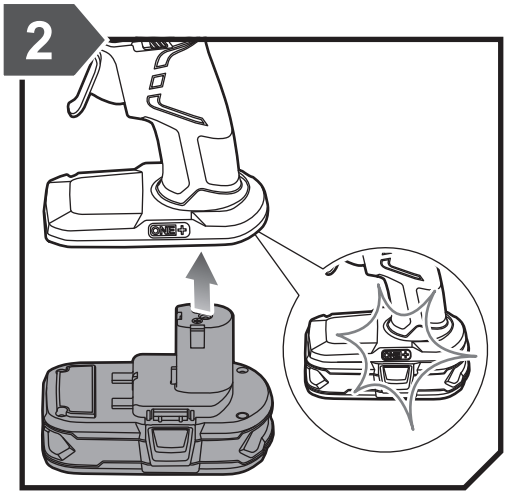

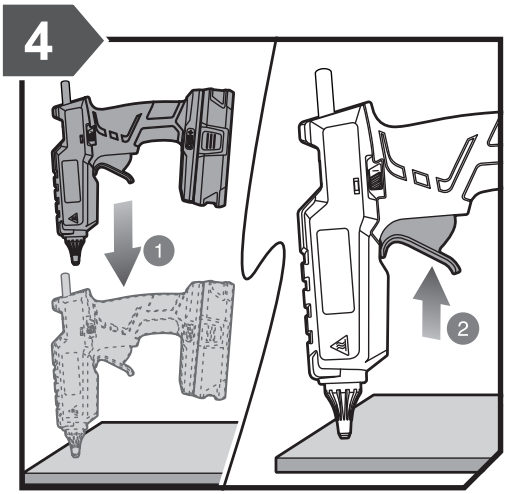

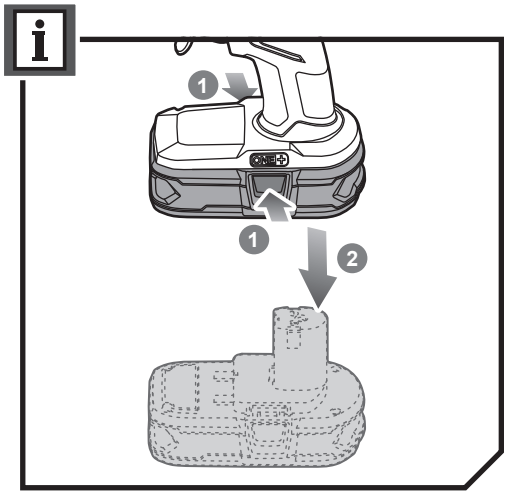

20161012v1

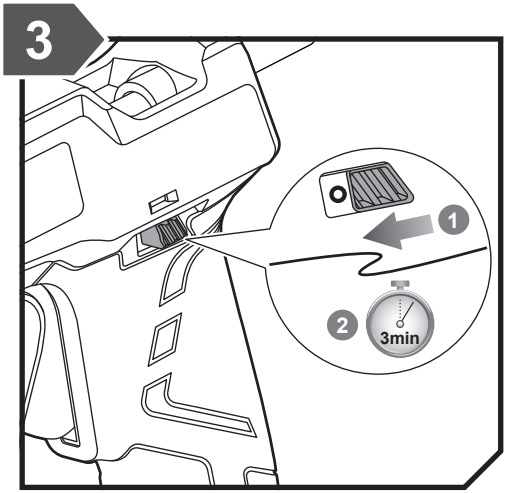
3
1
2
3min

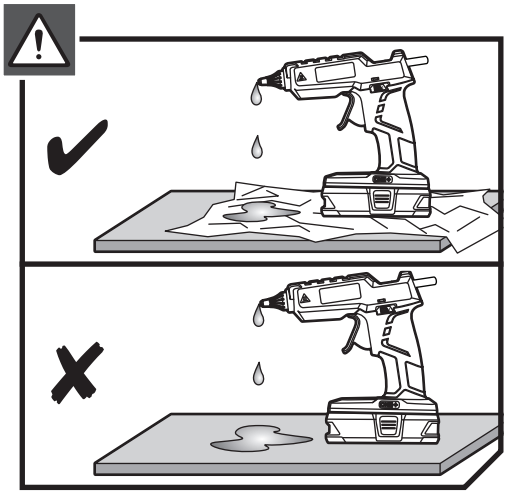

PRODUCT SPECIFICATIONS

18V glue gun	
Model	R18GLU
Voltage	18 V ⎓
Nozzle hole	3 mm
Glue sticks diameter	11mm (7/16”)
Approximate heat up time	3 minutes
Runtime	
2.5 Ah battery	up to 30 glue sticks
5.0 Ah battery	up to 60 glue sticks

BATTERY AND CHARGER

Model	Compatible battery pack (not included)	Compatible charger (not included)
Lithium-Ion	RB18L13 RB18L15 RB18L20 RB18L25 RB18L26 RB18L40 RB18L50	BCS618G BCL14181H BCL14183H BCL1418IV* RC18150U

* for vehicles with 12V DC outlets

Imported by:

Techtronic Industries (Australia) Pty. Ltd.
31 Gilby Road,
Mount Waverley VIC 3149,
Australia

Techtronic Industries New Zealand Ltd.
2 Landing Drive, Mangere,
Auckland, New Zealand 2022