AEG

BEWS18125BLC
BEWS18125BLP

Original instructions

Important!

This appliance is not intended to be used or cleaned by persons with reduced physical, sensory or mental capabilities, or lack of experience or knowledge, unless they have been given instructions concerning the safe use of the appliance by a person legally responsible for their safety. They should be supervised whilst using the appliance.

Children shall not use, clean or play with this appliance, which when not in use should be secured out of their reach.

It is essential that you read the instructions in this manual before assembling, operating and maintaining the product.

Subject to technical modifications.

1. On/Off switch
2. Safety lock lever
3. Spindle lock button
4. Grinding wheel
5. Standard outer flange nut
6. Fixtec nut
7. Wheel guard lock lever
8. Half tool-less wheel guard
9. Anti-vibration auxiliary handle
10. Auxiliary handle
11. Handle, insulated gripping surface
12. Dust cover
13. Battery port
14. Toolless cutting guard
15. Wrench

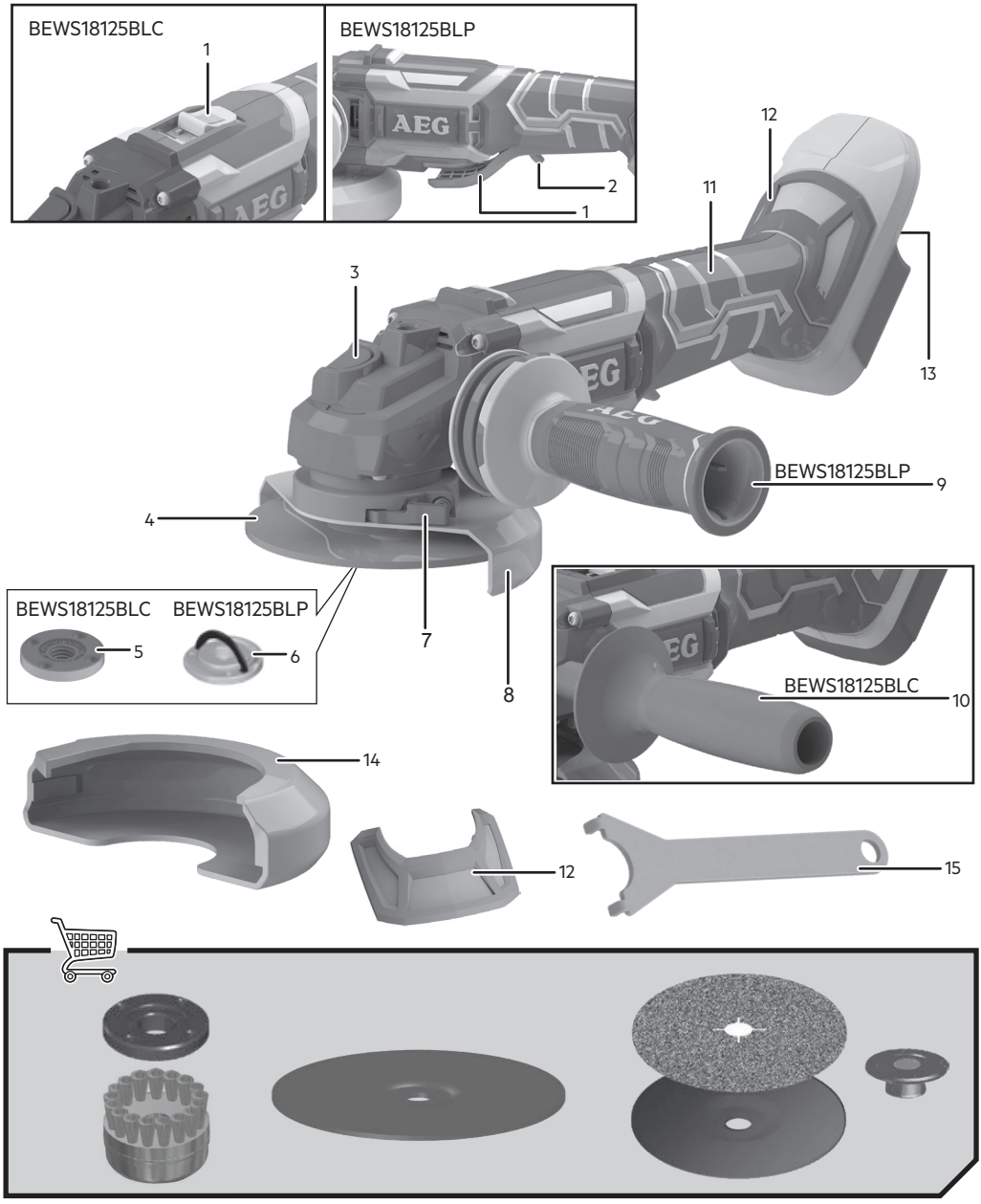

11
12
BEWS18125BLC

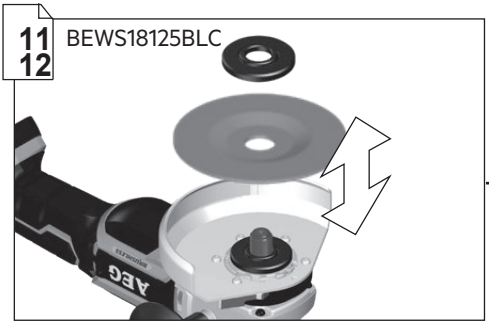

13
14
BEWS18125BLP

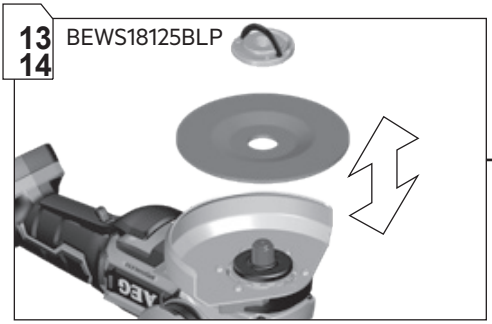

23

24
25
26

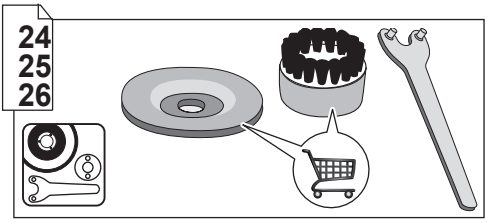

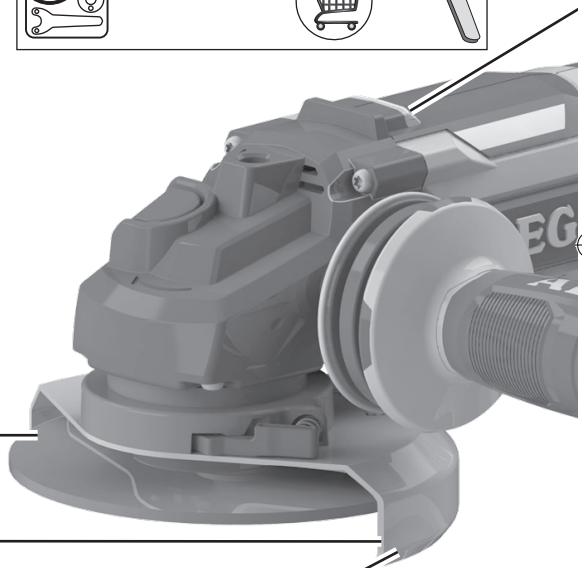

8
9

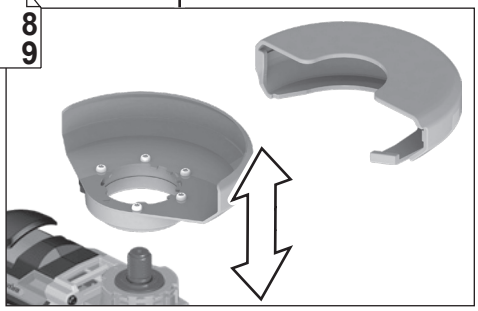

10

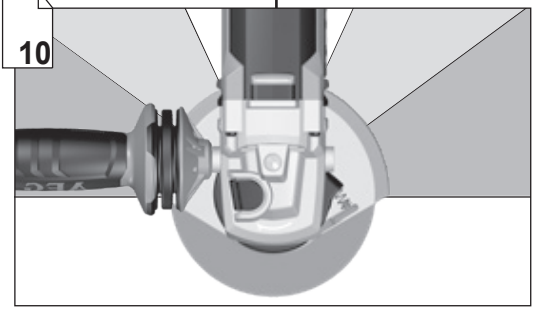

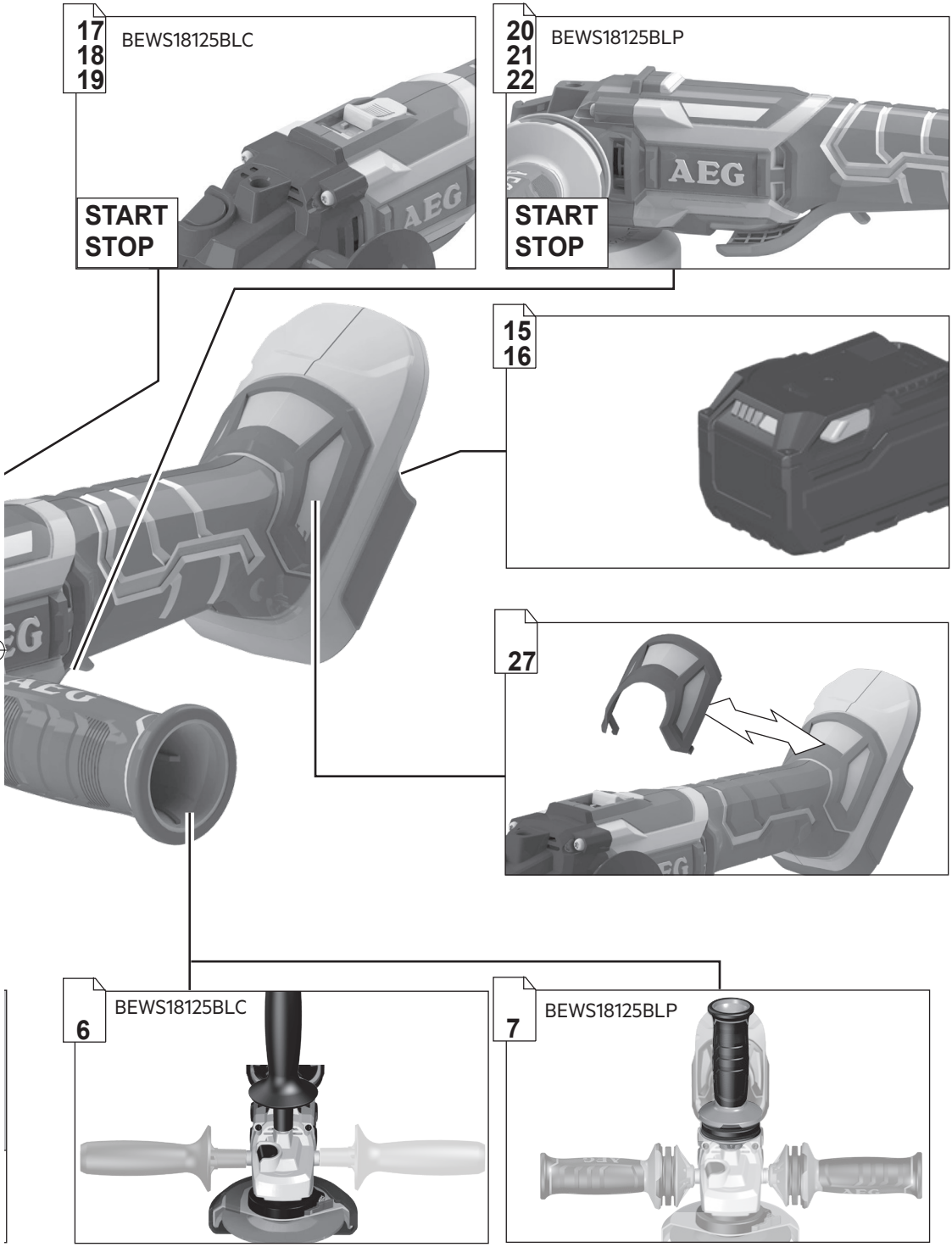
17
18
19
BEWS18125BLC
START
STOP
20
21
22
BEWS18125BLP
START
STOP
15
16
27
6
BEWS18125BLC
7
BEWS18125BLP

BEWS18125BLC

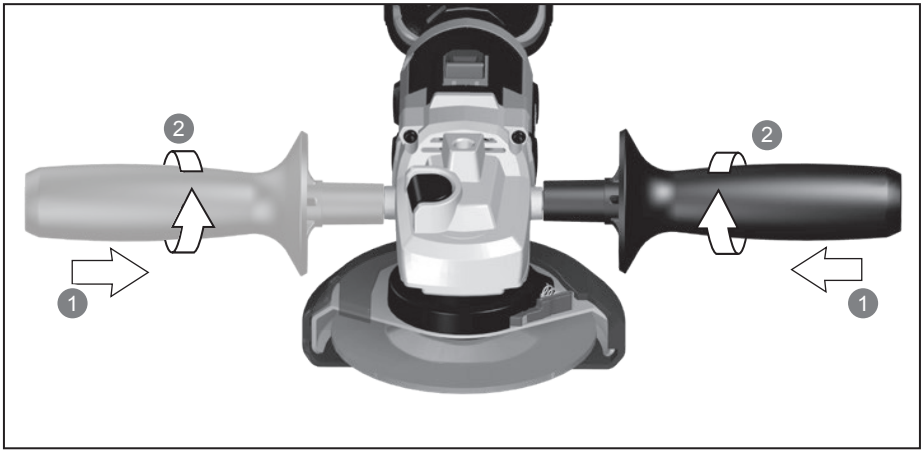

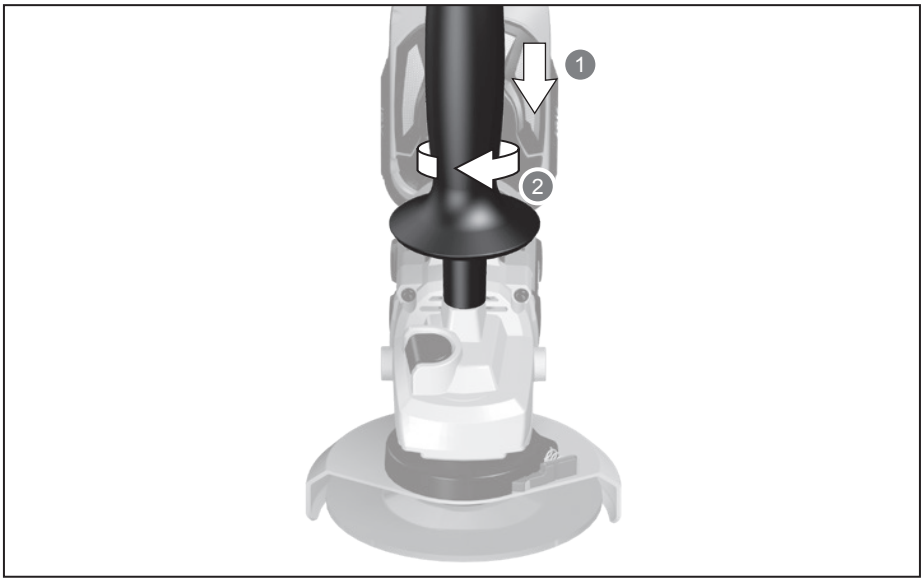

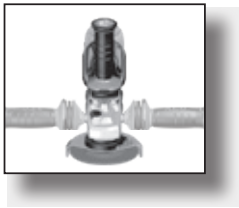

BEWS18125BLP

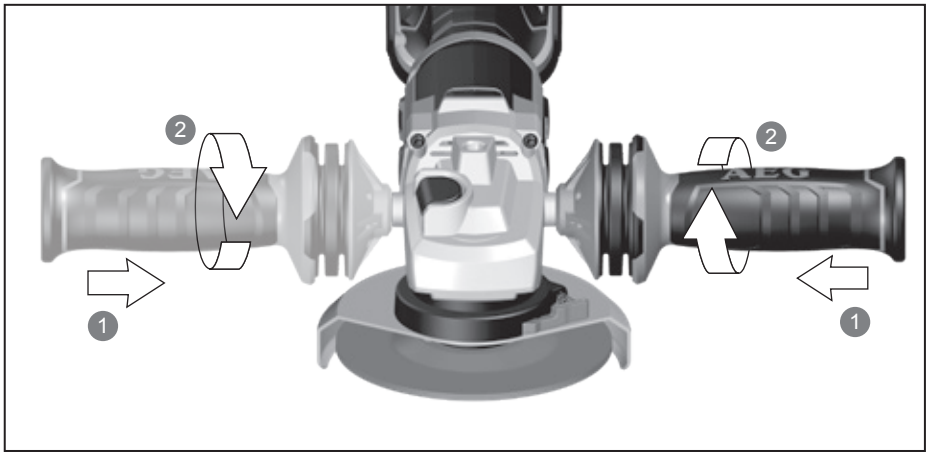

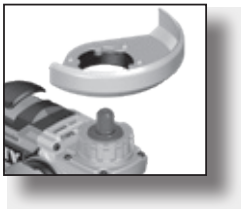

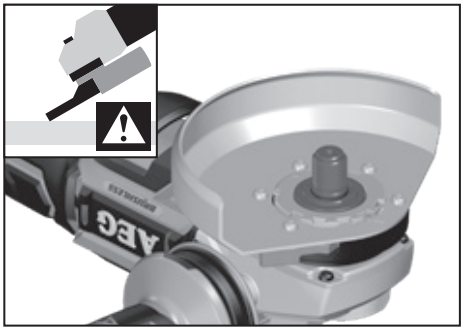

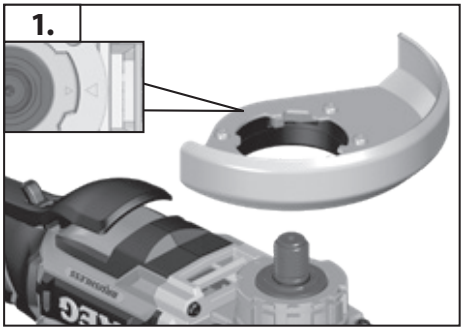
1.

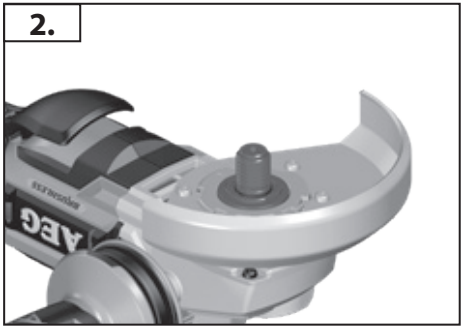
2.

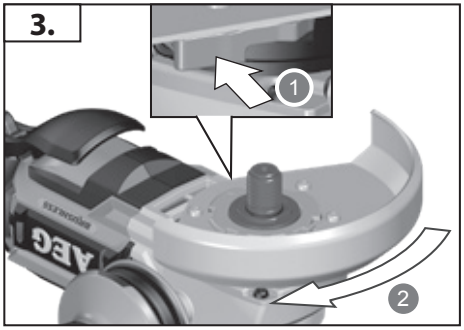
3.
1
2

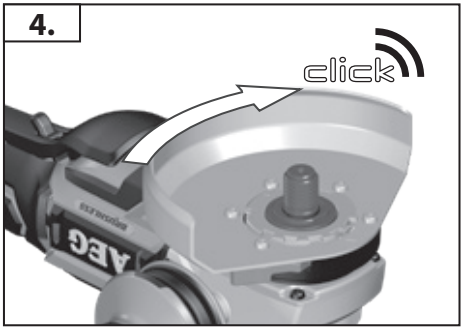
4.
click

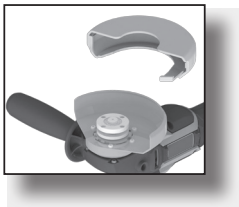

1.

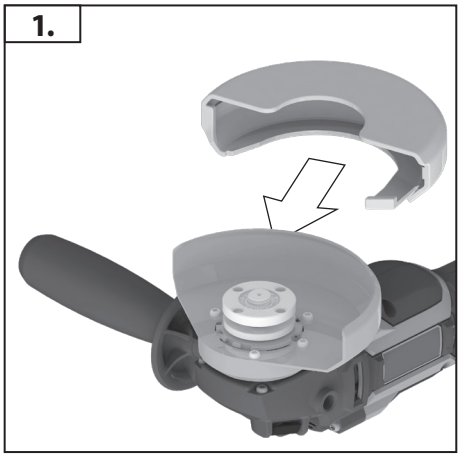

2.

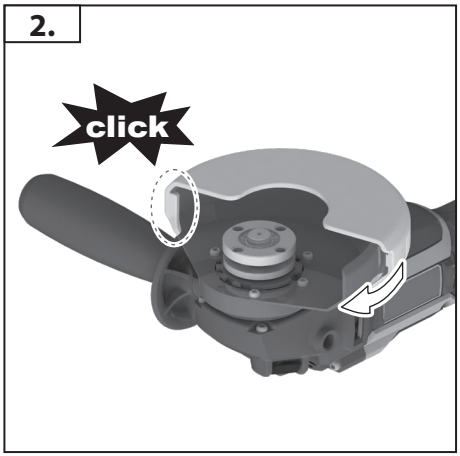

3.

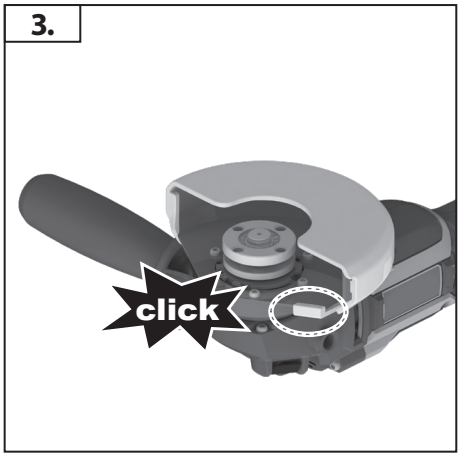

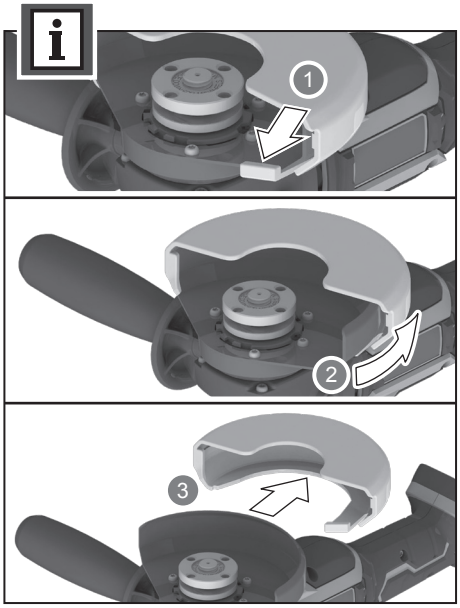

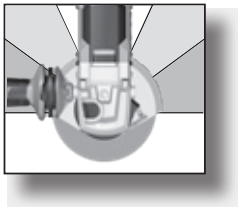

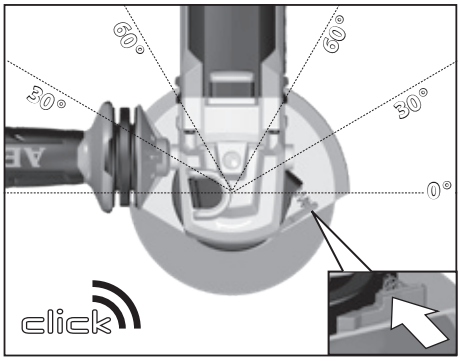
60°
60°
30°
30°
0°
click

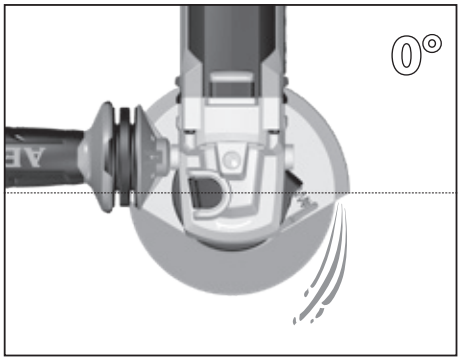
0°

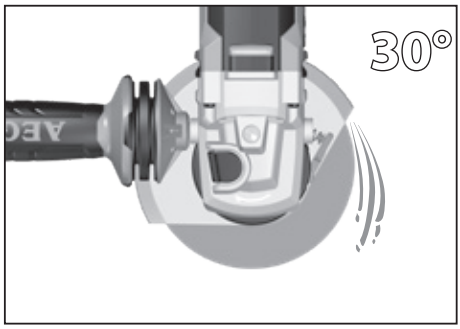
30°

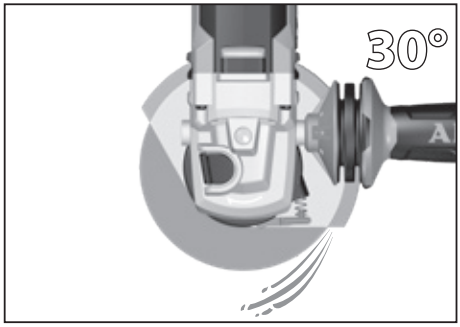
30°

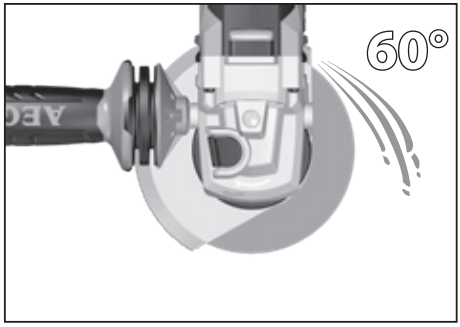
60°

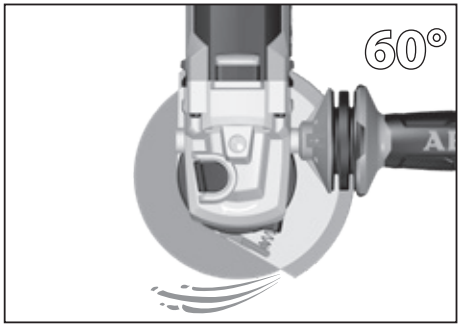
60°

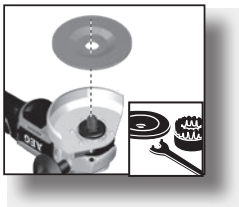

BEWS18125BLC

WARNING:

Always check the spindle lock button is fully released before switching on the tool!

After using the spindle lock to tighten / loosen the abrasive disk, it is possible that the button may stick in the lock position. Whilst this will not damage the tool it may cause the tool or battery protection to operate and remove power to the tool. Turn off the switch, remove the battery then carefully rock the disk back and forth to release the spindle lock button.

NOTE:

If the battery protection has also activated, simply remove the battery pack from the tool and replace it, thus resetting the protection.

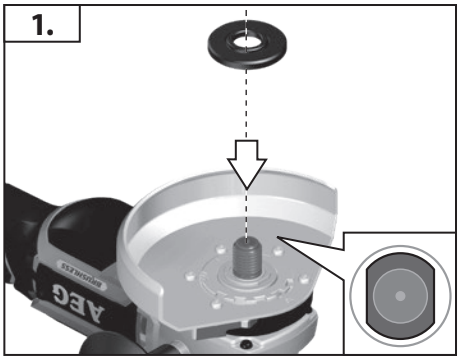

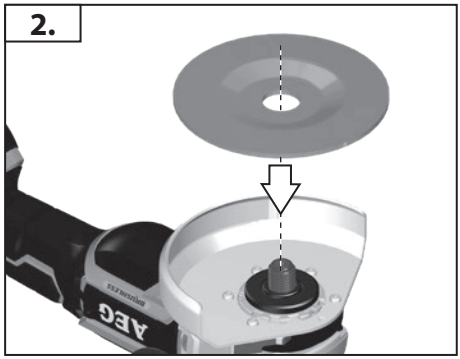

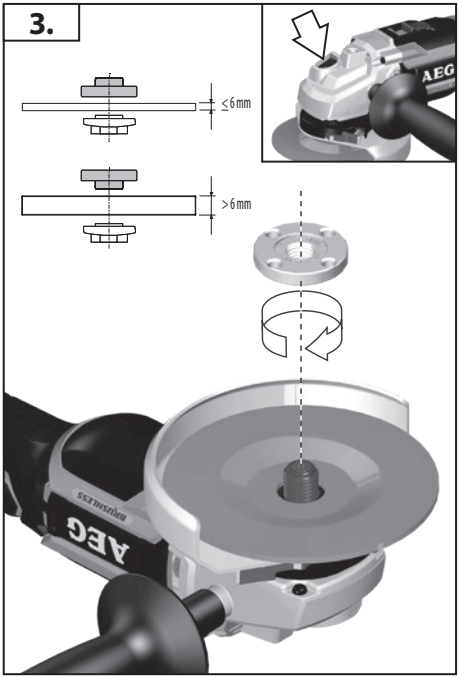

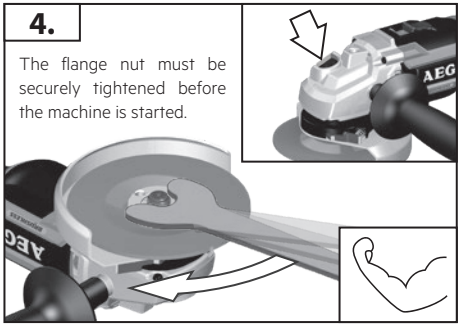

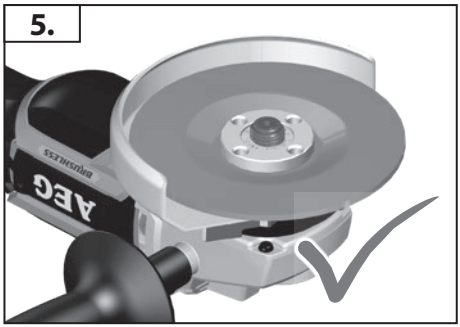

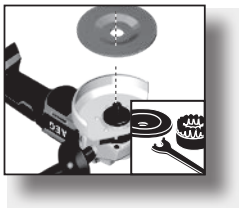

BEWS18125BLC

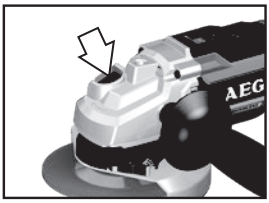

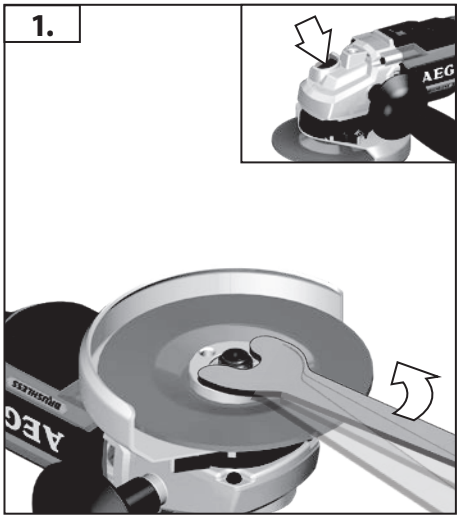

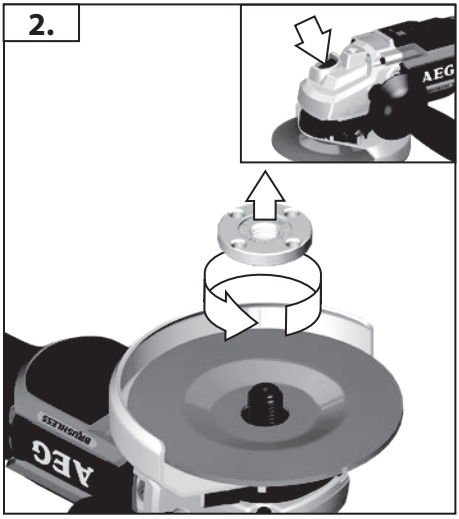

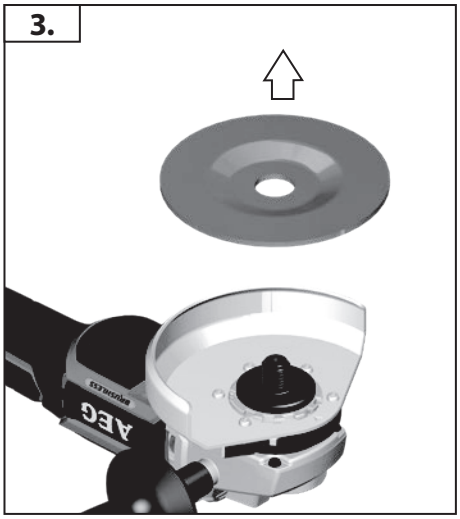

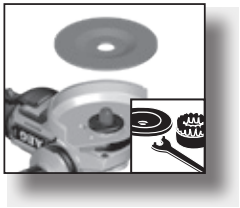

BEWS18125BLP

WARNING:

Always check the spindle lock button is fully released before switching on the tool!

After using the spindle lock to tighten / loosen the abrasive disk, it is possible that the button may stick in the lock position. Whilst this will not damage the tool it may cause the tool or battery protection to operate and remove power to the tool. Turn off the switch, remove the battery then carefully rock the disk back and forth to release the spindle lock button.

NOTE:

If the battery protection has also activated, simply remove the battery pack from the tool and replace it, thus resetting the protection.

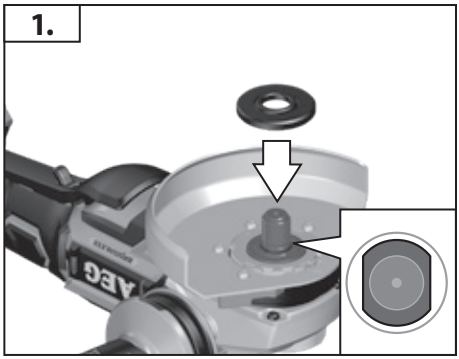

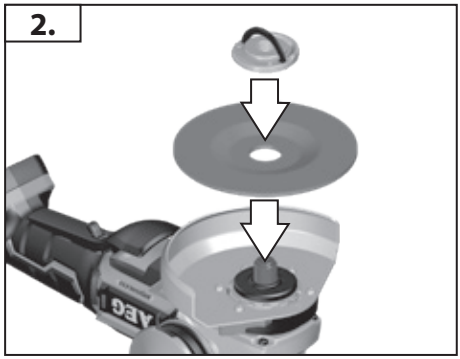

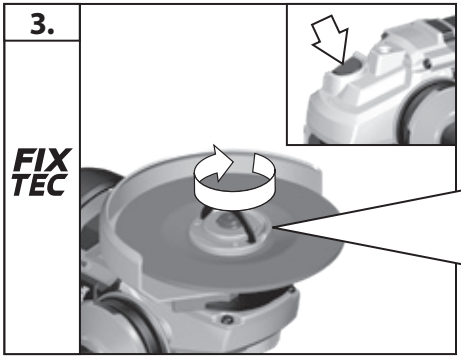

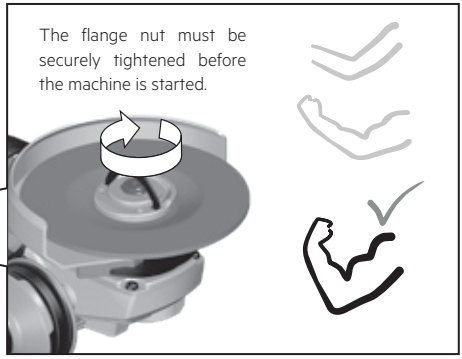

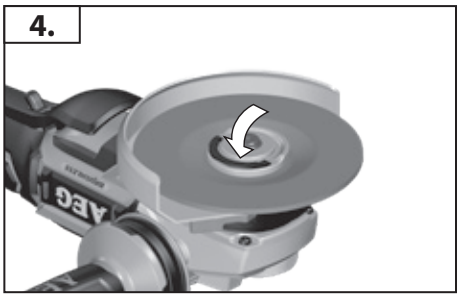

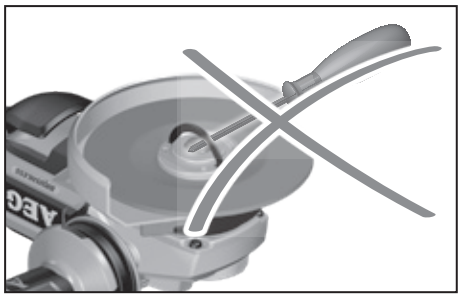

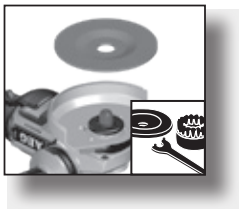

BEWS18125BLP

1.

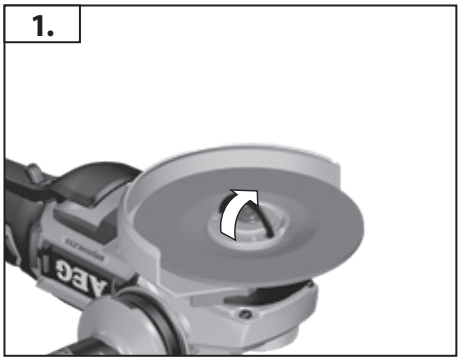

2.

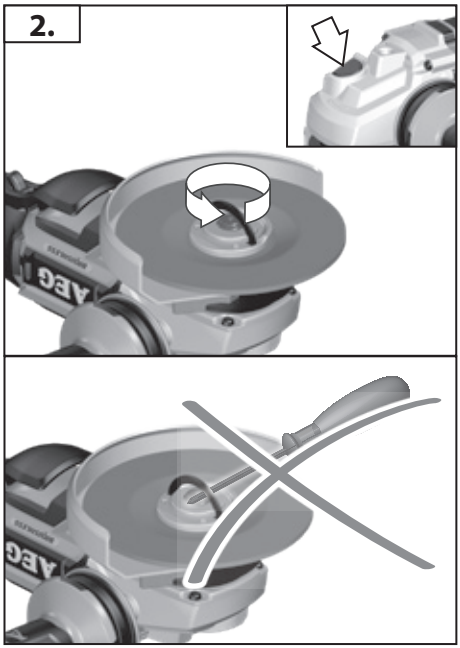

3.

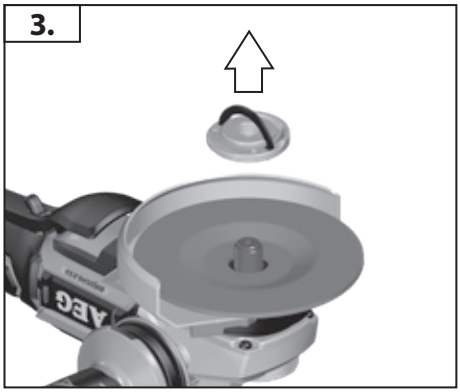

4.

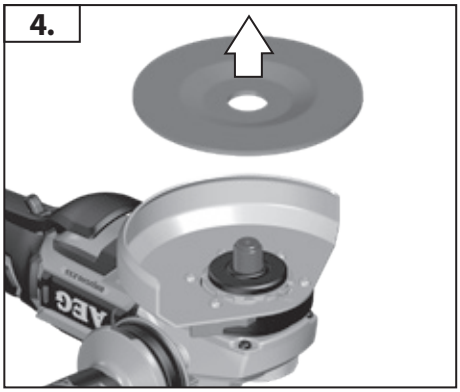

Remove the battery pack before starting any work on the product.

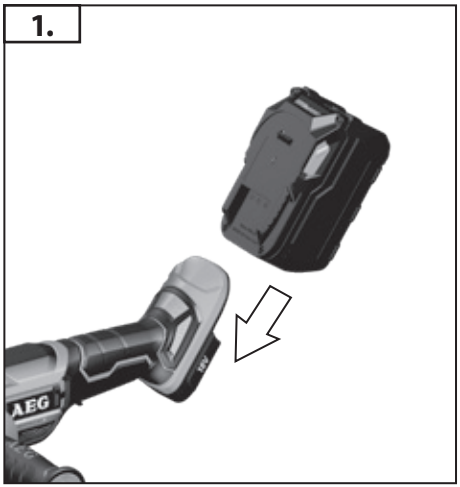

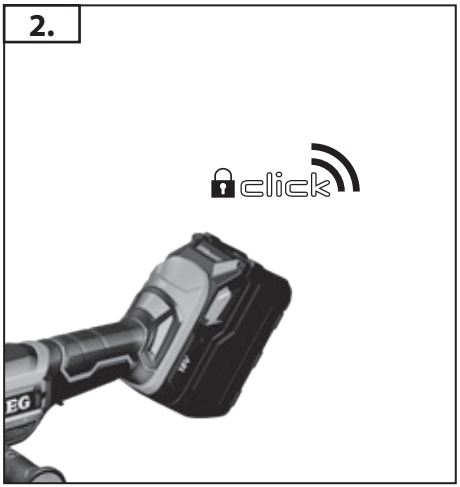

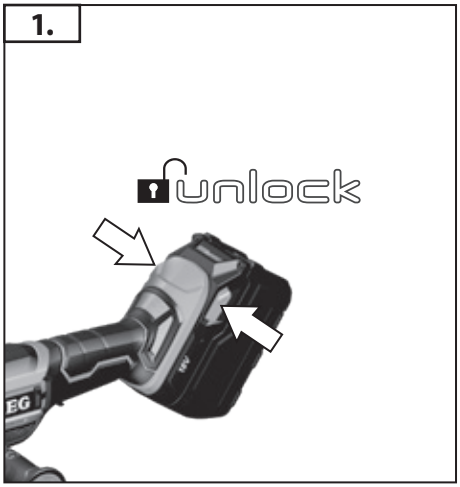

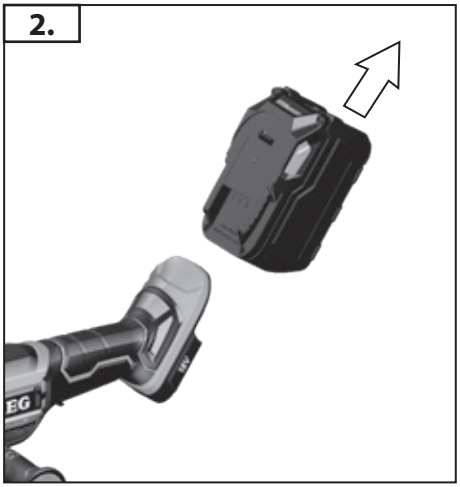

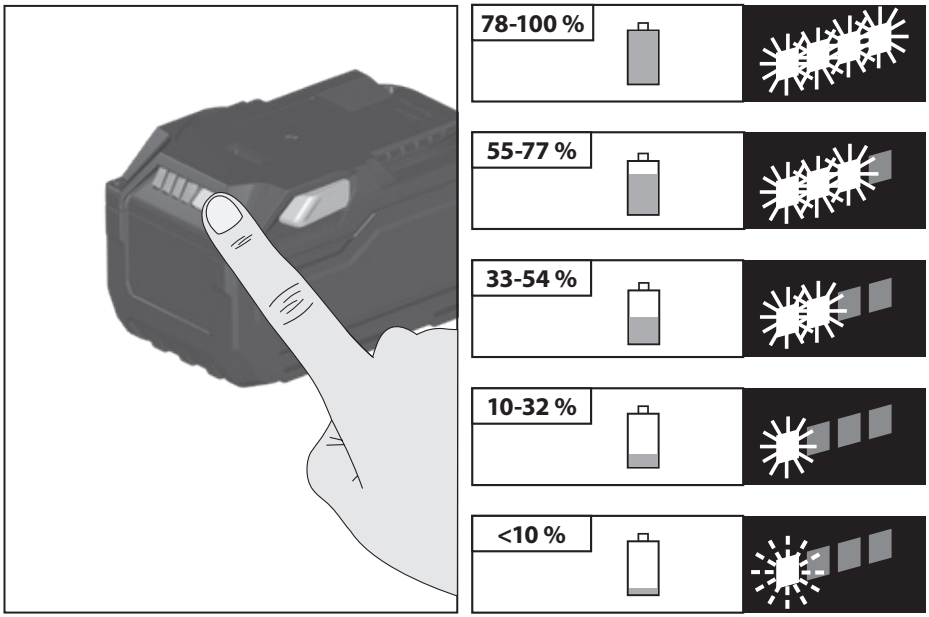
78-100 %
55-77 %
33-54 %
10-32 %
<10 %

BEWS18125BLC

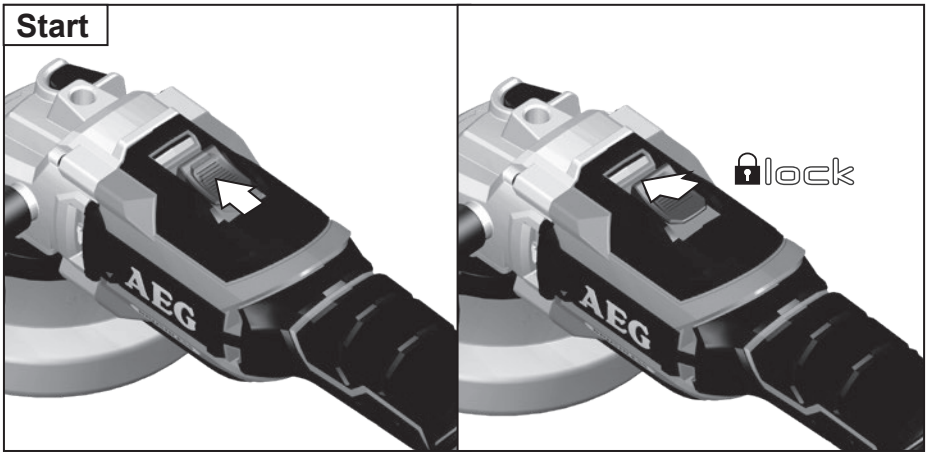

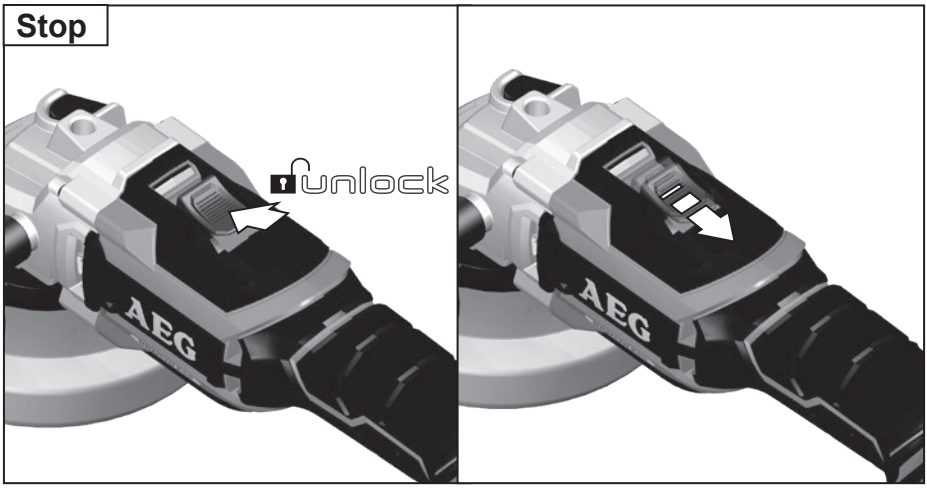

BEWS18125BLC

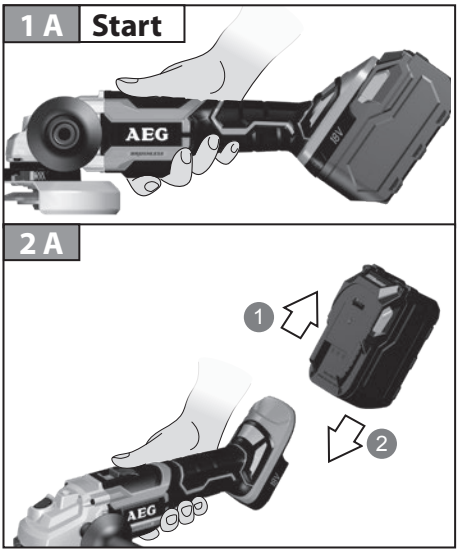

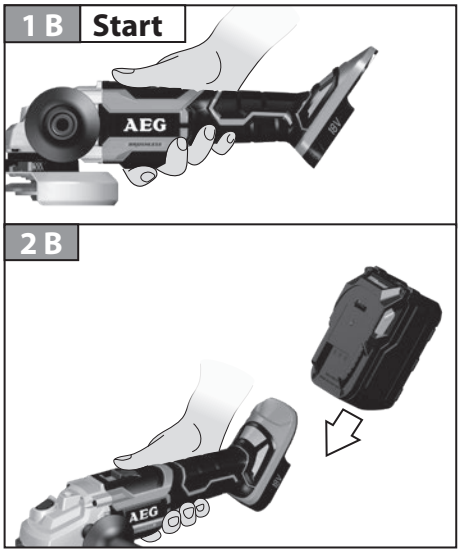

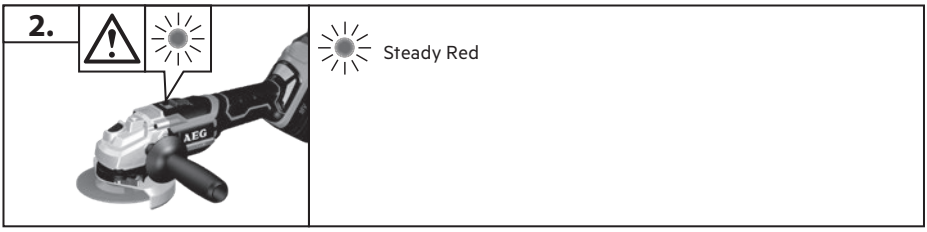

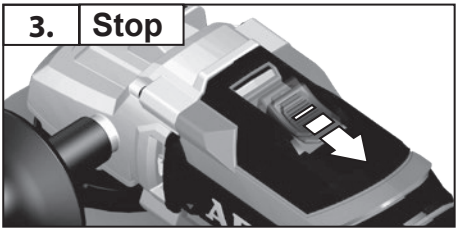

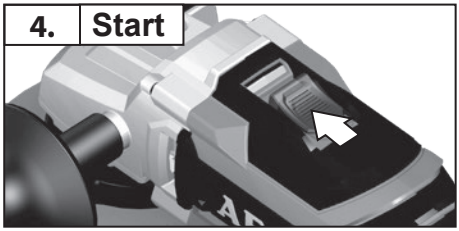

BEWS18125BLC

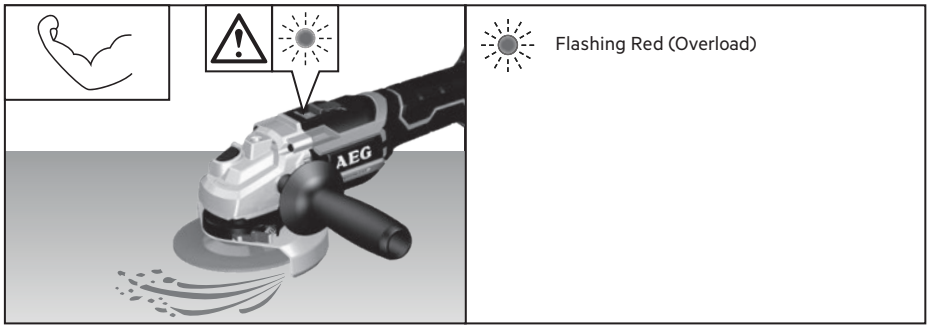

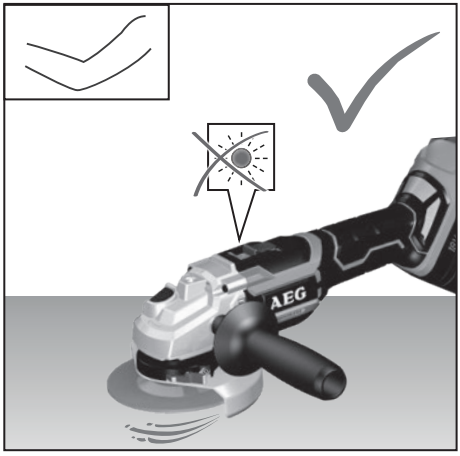

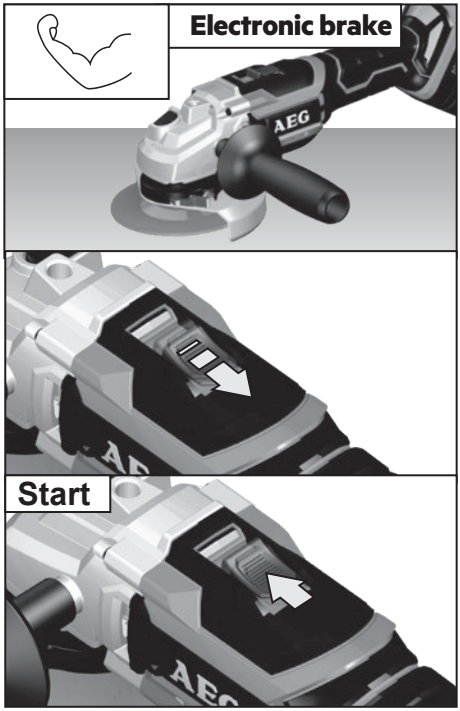

BEWS18125BLP

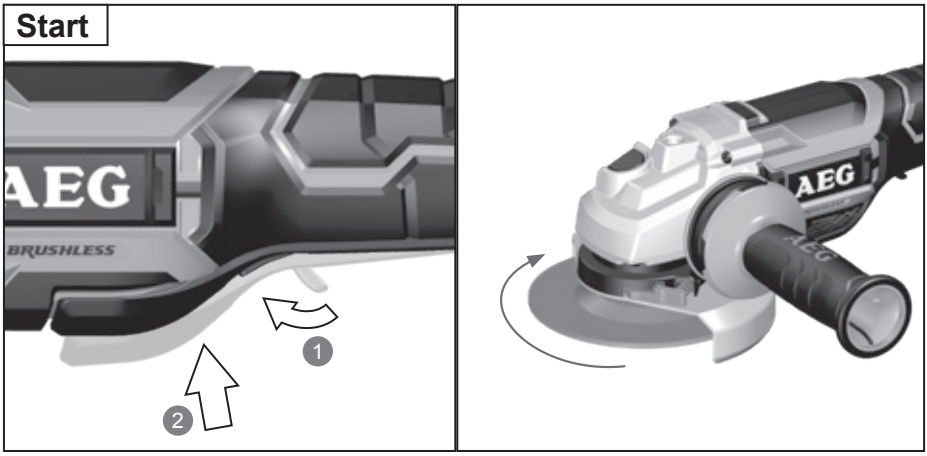

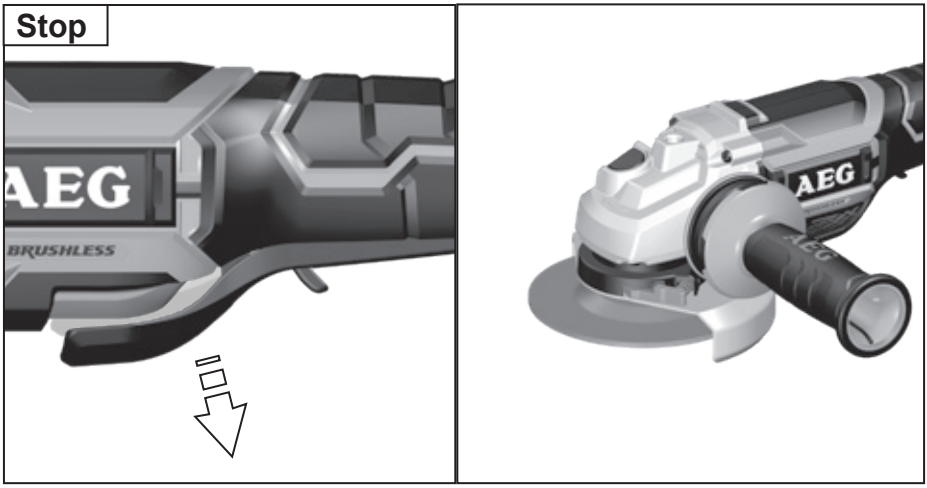

BEWS18125BLP

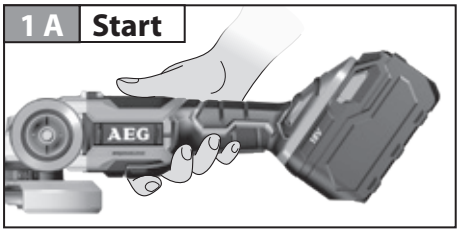

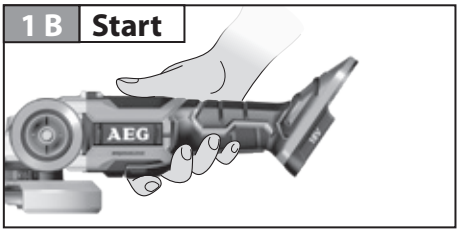

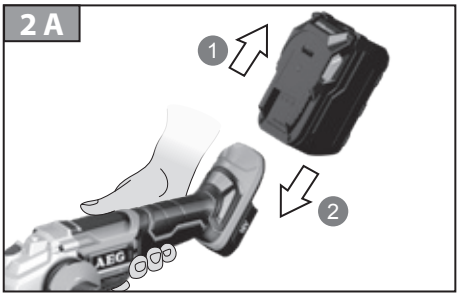

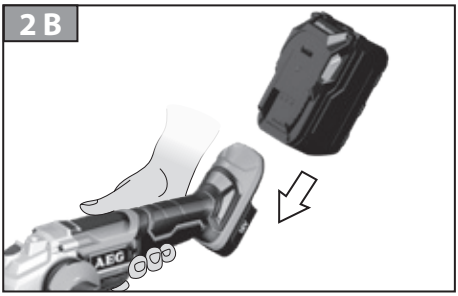

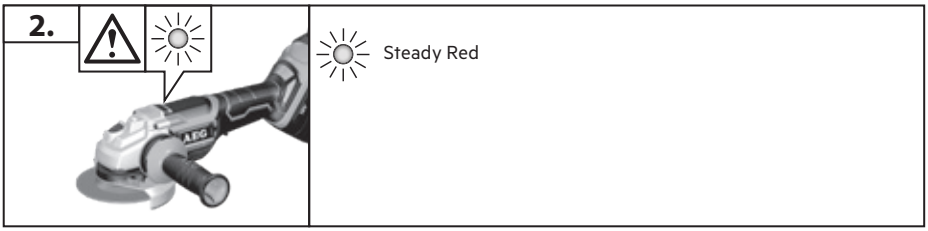

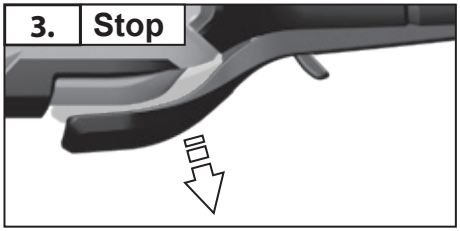

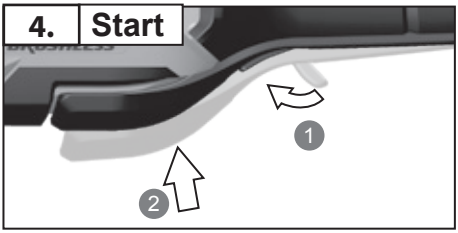

BEWS18125BLP

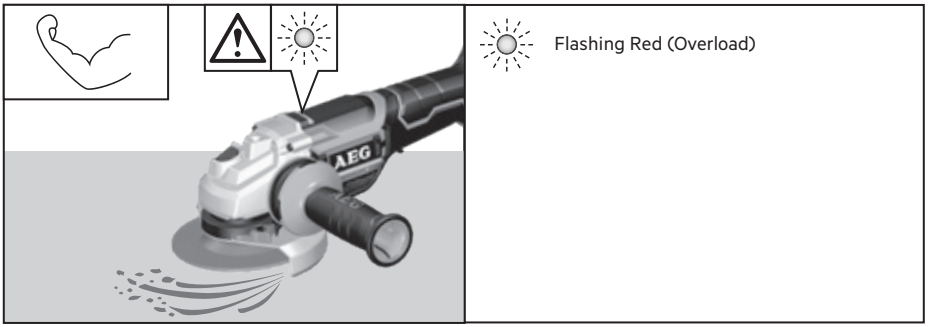

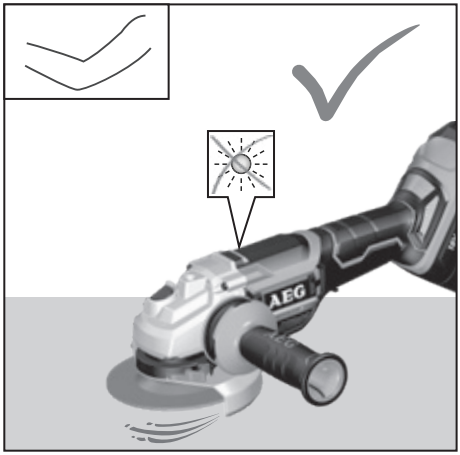

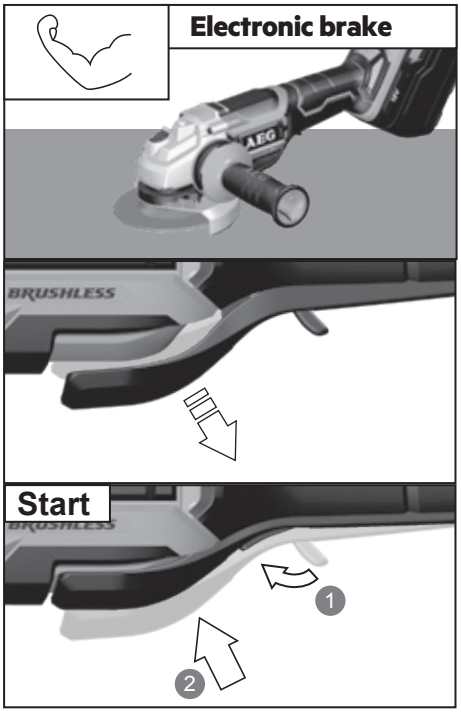

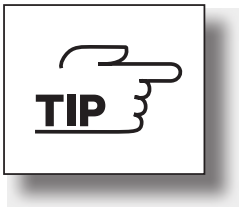
TIP

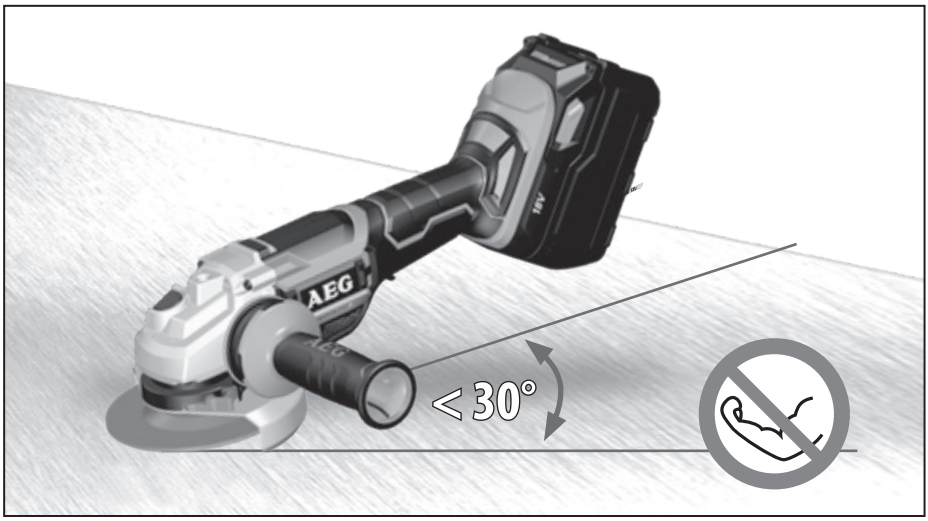
AEG
18V
< 30°

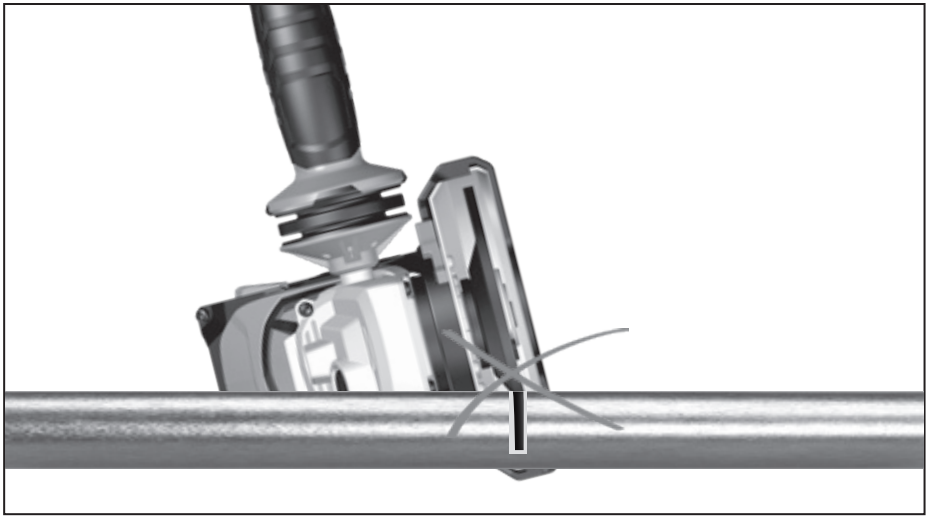

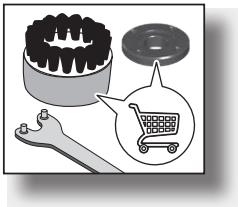

Accessory

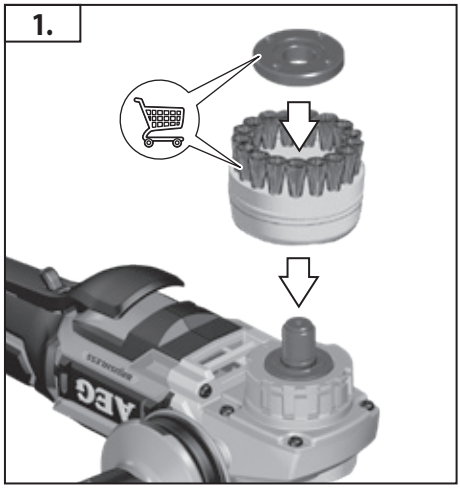

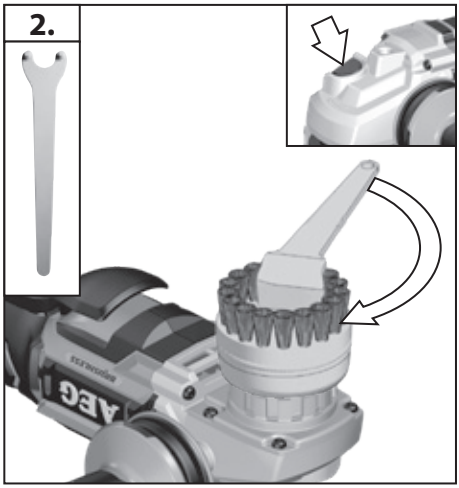

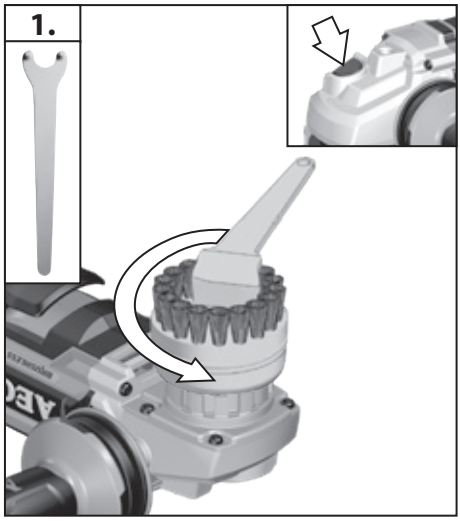

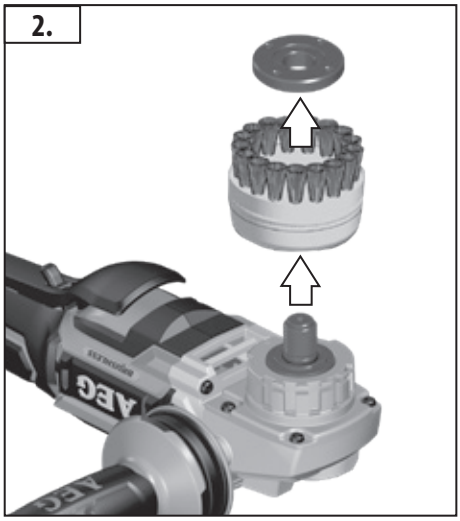

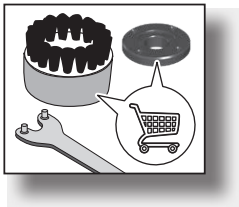

Accessory

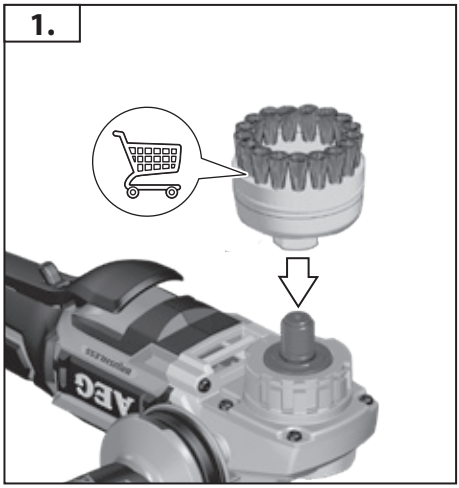

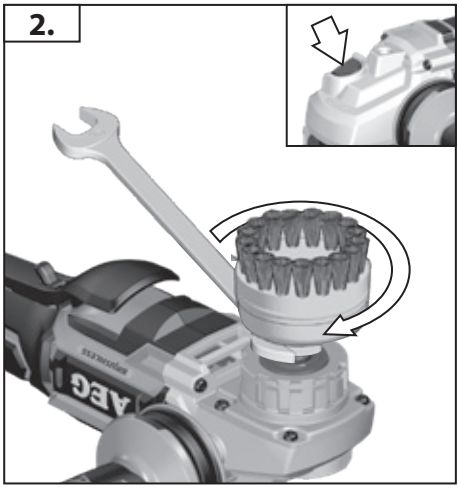

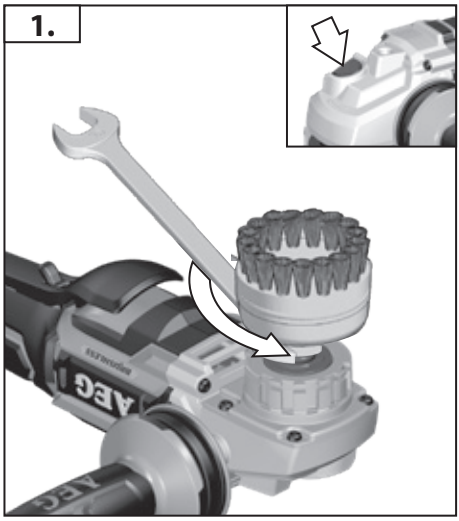

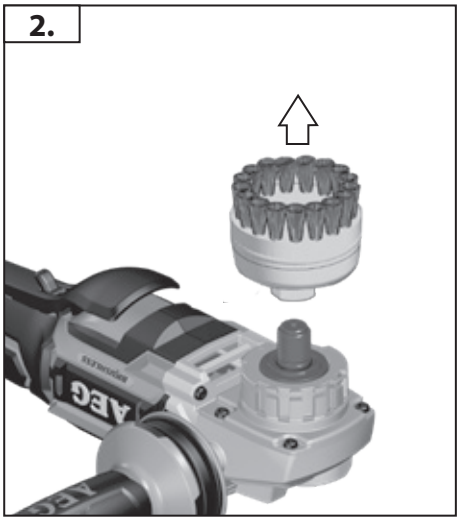

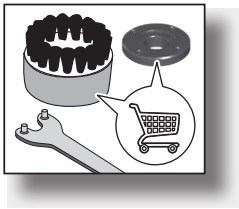

Accessory

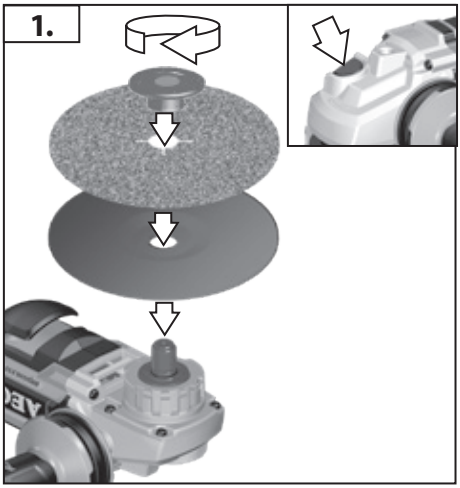

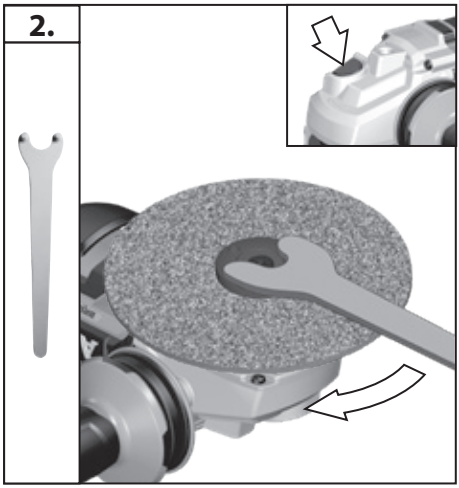

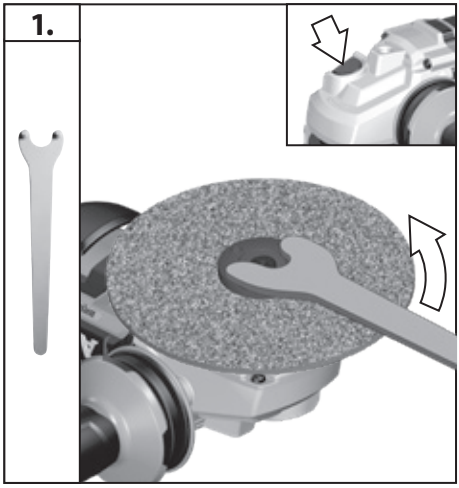

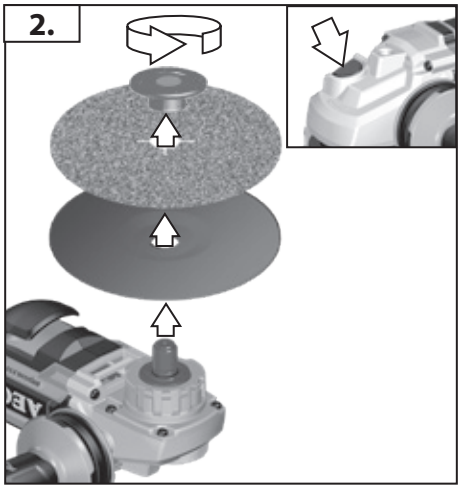

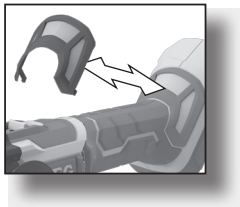

Remove and brush the dust cover after every 5 hours of work. (Sooner in dusty environments)

If over current protection is frequent, check if there is any blockage at the vents. Clean as necessary and try again.

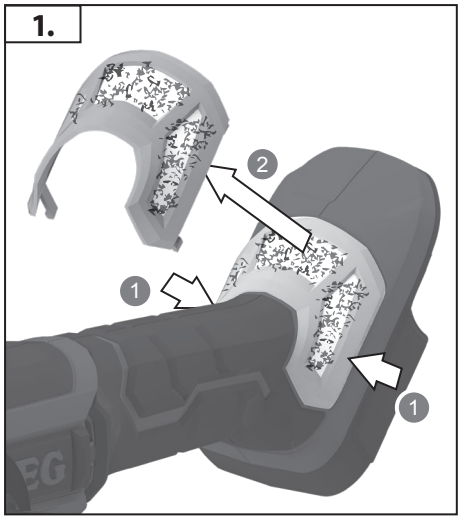

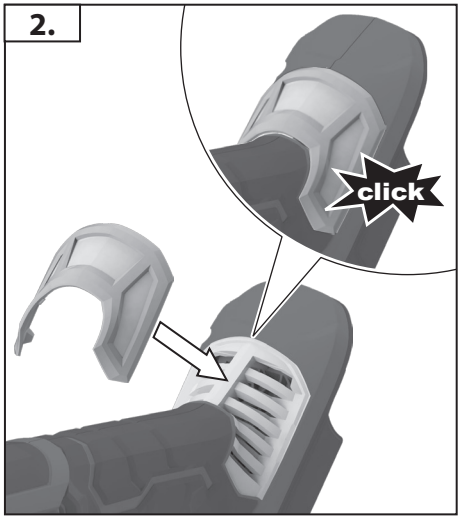

Rated voltage	18V ⎓
Rated speed	11000 min^{-1}
Thickness of grinding wheel	6 mm
Grinding wheel diameter	125 mm
Thread of work spindle	M14
Weight - not including battery pack	2.1 kg

Measured values determined according to EN 60745. Typically, the A-weighted noise levels of the tool are:

A-weighted sound pressure level	L_p = 83 dB(A)
Uncertainty K	3 dB(A)
A-weighted sound power level	L_W = 94 dB(A)
Uncertainty K	3 dB(A)

Wear ear protectors.

The vibration total values (triaxial vector sum) determined according to EN 60745:

Vibration emission value

Surface grinding: Vibration emission value	$a_{h,AG}$ = 9.4 m/s^2
Uncertainty K	1.5 m/s^2

For other applications, e.g. Abrasive Cutting-Off Operations or Wire Brushing other vibration values could occur.

TYPE OF DISCS/WHEELS

Designation	Type
Straight cutting-off wheels not reinforced	41
Straight and depressed-centre cutting-off wheels, reinforced	41
Depressed-centre grinding wheels reinforced	27

⚠ WARNING

The vibration emission level given in this information sheet has been measured in accordance with a standardised test given in EN 60745 and may be used to compare one tool with another. It may be used for a preliminary assessment of exposure. The declared vibration emission level represents the main applications of the tool. However if the tool is used for different applications, with different accessories or poorly maintained, the vibration emission may differ. This may significantly increase the exposure level over the total working period.

An estimation of the level of exposure to vibration should also take into account the times when the tool is switched off or when it is running but not actually doing the job. This may significantly reduce the exposure level over the total working period.

Identify additional safety measures to protect the operator from the effects of vibration such as: maintain the tool and the accessories, keep the hands warm, organisation of work patterns.

BATTERY AND CHARGER

Compatible battery pack (not included)	Compatible charger (not included)
L1815R	
L1820R	
L1825R	AL18G
L1830R	AL1218G
L1840R	BL1218
L1850R	BLK1218
L1860R	BL18DP-X5
L1860B	BL18DP2-X5
L1860R-X5	
L1890R	

Use AEG 18V battery and charger only

⚠ **WARNING! Read all safety warnings and all instructions.** Failure to follow the warnings and instructions may result in electric shock, fire and/or serious injury. **Save all warnings and instructions for future reference.**

ANGLE GRINDER SAFETY WARNINGS

Safety Warnings Common for Grinding, Wire Brushing or Abrasive Cutting-Off Operations:

a. **This power tool is intended to function as a grinder, wire brush or cut-off tool. Read all safety warnings, instructions, illustrations and specifications provided with this power tool.** Failure to follow all instructions listed below may result in electric shock, fire and/or serious injury.

b. **Operations such as sanding or polishing are not recommended to be performed with this power tool.** Operations for which the power tool was not designed may

create a hazard and cause personal injury.

c. **Do not use accessories which are not specifically designed and recommended by the tool manufacturer.** Just because the accessory can be attached to your power tool, it does not assure safe operation.

d. **The rated speed of the accessory must be at least equal to the maximum speed marked on the power tool.** Accessories running faster than their rated speed can break and fly apart.

e. **The outside diameter and the thickness of your accessory must be within the capacity rating of your power tool.** Incorrectly sized accessories cannot be adequately guarded or controlled.

f. **Threaded mounting of accessories must match the grinder spindle thread.** For accessories mounted by flanges, the arbour hole of the accessory must fit the locating diameter of the flange. Accessories that do not match the mounting hardware of the power tool will run out of balance, vibrate excessively and may cause loss of control.

g. **Do not use a damaged accessory. Before each use inspect the accessory such as abrasive wheels for chips and cracks, backing pad for cracks, tear or excess wear, wire brush for loose or cracked wires. If power tool or accessory is dropped, inspect for damage or install an undamaged accessory. After inspecting and installing an accessory, position yourself and bystanders away from the plane of the rotating accessory and run the power tool at maximum no-load speed for one minute.** Damaged accessories will normally break apart during this test time.

h. **Wear personal protective equipment. Depending on application, use face shield, safety goggles or safety glasses. As appropriate, wear dust mask, hearing protectors, gloves and shop apron capable of stopping small abrasive or workpiece fragments. The eye protection must be capable of stopping small abrasive or workpiece fragments.** The eye protection must be capable of stopping flying debris generated by various operations. The dust mask or respirator must be capable of filtrating particles generated by your operation. Prolonged exposure to high intensity noise may cause hearing loss.

i. **Keep bystanders a safe distance away from work area. Anyone entering the work area must wear personal protective equipment.** Fragments of workpiece or of a broken accessory may fly away and cause injury beyond immediate area of operation.

j. **Hold the power tool by insulated gripping surfaces only, when performing an operation where the cutting tool may contact hidden wiring.** Contact with a “live” wire will also make exposed metal parts of the power tool “live” and could give the operator an electric shock.

k. **Never lay the power tool down until the accessory has come to a complete stop.** The spinning accessory may grab the surface and pull the power tool out of your control.

l. **Do not run the power tool while carrying it at your side.** Accidental contact with the spinning accessory could snag your clothing, pulling the accessory into your body.

m. **Regularly clean the power tool’s air vents.** The motor’s fan will draw the dust inside the housing and excessive accumulation of powdered metal may cause electrical hazards.

n. **Do not operate the power tool near flammable materials.** Sparks could ignite these materials.

o. **Do not use accessories that require liquid coolants.** Using water or other liquid coolants may result in electrocution or shock.

Kickback and Related Warnings

Kickback is a sudden reaction to a pinched or snagged rotating wheel, backing pad, brush or any other accessory. Pinching or snagging causes rapid stalling of the rotating accessory which in turn causes the uncontrolled power tool to be forced in the direction opposite of the accessory’s rotation at the point of the binding.

For example, if an abrasive wheel is snagged or pinched by the workpiece, the edge of the wheel that is entering into the pinch point can dig into the surface of the material causing the wheel to climb out or kick out. The wheel may either jump toward or away from the operator, depending on direction of the wheel’s movement at the point of pinching. Abrasive wheels may also break under these conditions.

Kickback is the result of power tool misuse and/or incorrect operating procedures or conditions and can be avoided by taking proper precautions as given below.

a. **Maintain a firm grip on the power tool and position your body and arm to allow you to resist kickback forces. Always use auxiliary handle, if provided, for maximum control over kickback or torque reaction during start-up.** The operator can control torque reactions or kickback forces, if proper precautions are taken.

b. **Never place your hand near the rotating accessory.** Accessory may kickback over your hand.

c. **Do not position your body in the area where power tool will move if kickback occurs.** Kickback will propel the tool in direction opposite to the wheel’s movement at the point of snagging.

d. **Use special care when working corners, sharp edges etc. Avoid bouncing and snagging the accessory.** Corners, sharp edges or bouncing have a tendency to snag the rotating accessory and cause loss of control or kickback.

e. **Do not attach a saw chain, woodcarving blade or toothed saw blade.** Such blades create frequent kickback and loss of control.

Safety Warnings Specific for Grinding and Abrasive Cutting-Off Operations:

a. **Use only wheel types that are recommended for your power tool and the specific guard designed for the selected wheel.** Wheels for which the power tool was not designed cannot be adequately guarded and are unsafe.

b. **The guard must be securely attached to the power tool and positioned for maximum safety, so the least amount of wheel is exposed towards the operator.** The guard helps to protect the operator from broken wheel fragments, accidental contact with wheel and sparks that could ignite clothing.

c. **Wheels must be used only for recommended applications. For example: do not grind with the side of cut-off wheel.** Abrasive cut-off wheels are intended for peripheral grinding, side forces applied to these wheels may cause them to shatter.

d. **Always use undamaged wheel flanges that are of correct size and shape for your selected wheel.** Proper wheel flanges support the wheel thus reducing the possibility of wheel breakage. Flanges for cut-off wheels may be different from

grinding wheel flanges.

e. **Do not use worn down wheels from larger power tools.** Wheel intended for larger power tool is not suitable for the higher speed of a smaller tool and may burst.

Additional Safety Warnings Specific for Abrasive Cutting-Off Operations:

a. **Do not "jam" the cut-off wheel or apply excessive pressure. Do not attempt to make an excessive depth of cut.** Overstressing the wheel increases the loading and susceptibility to twisting or binding of the wheel in the cut and the possibility of kickback or wheel breakage.

b. **Do not position your body in line with and behind the rotating wheel.** When the wheel, at the point of operation, is moving away from your body, the possible kickback may propel the spinning wheel and the power tool directly at you.

c. **When wheel is binding or when interrupting a cut for any reason, switch off the power tool and hold the power tool motionless until the wheel comes to a complete stop. Never attempt to remove the cut-off wheel from the cut while the wheel is in motion otherwise kickback may occur.** Investigate and take corrective action to eliminate the cause of wheel binding.

d. **Do not restart the cutting operation in the workpiece. Let the wheel reach full speed and carefully re-enter the cut.** The wheel may bind, walk up or kickback if the power tool is restarted in the workpiece.

e. **Support panels or any oversized workpiece to minimize the risk of wheel pinching and kickback.** Large workpieces tend to sag under their own weight. Supports must be placed under the workpiece near the line of cut and near the edge of the workpiece on both sides of the wheel.

f. **Use extra caution when making a "pocket cut" into existing walls or other blind areas.** The protruding wheel may cut gas or water pipes, electrical wiring or objects that can cause kickback.

Safety Warnings Specific for Wire Brushing Operations:

a. **Be aware that wire bristles are thrown by the brush even during ordinary operation. Do not overstress the wires by applying excessive load to the brush.** The wire bristles can easily penetrate light clothing and/or skin.

b. **If the use of a guard is recommended for wire brushing, do not allow any interference of the wire wheel or brush with the guard.** Wire wheel or brush may expand in diameter due to work load and centrifugal forces.

ADDITIONAL SAFETY WARNINGS

Dust and splinters must not be removed while the machine is running.

Never reach into the danger area of the tool when it is running.

Always use the auxiliary handle.

Always use the protecting cap when roughing-down and separating.

Immediately switch off the machine in case of considerable vibrations or if other malfunctions occur. Check the machine in order to find out the cause.

Always use and store the grinding disks according to the manufacturer's instructions.

When grinding metal, flying sparks are produced. Take care that no persons are endangered. Because of the danger of fire, no combustible materials should be located in the vicinity (spark flight zone). Do not use dust extraction.

Due care should be taken that no sparks or sanding dust flying from the workpiece come into contact with you.

The adjusting nut must be tightened before starting to work with the machine.

The workpiece must be fixed if it is not heavy enough to be steady. Never lead the workpiece to the grinding disk with your hand.

For accessories intended to be fitted with threaded hole wheel, ensure that the thread in the wheel is long enough to accept the spindle length.

For cutting or separating use a closed protection cap, available as an accessory.

Do not dispose of used battery packs in the household refuse or by burning them. AEG Distributors offer to retrieve old batteries to protect our environment.

Do not store the battery pack together with metal objects (short circuit risk).

Use only System GBS chargers for charging System GBS battery packs. Do not use battery packs from other systems.

Never break open battery packs and chargers and store only in dry rooms. Keep dry at all times.

Battery acid may leak from damaged batteries under extreme load or extreme temperatures. In case of contact with battery acid wash it off immediately with soap and water. In case of eye contact rinse thoroughly for at least 10 minutes and immediately seek medical attention.

ADDITIONAL BATTERY SAFETY WARNINGS

⚠ **WARNING!** To reduce the risk of fire, personal injury, and product damage due to a short circuit, never immerse your tool, battery pack or charger in fluid or allow a fluid to flow inside them. Corrosive or conductive fluids, such as seawater, certain industrial chemicals, and bleach or bleach containing products, etc., can cause a short circuit.

RESIDUAL RISKS

Even when the product is used as prescribed, it is still impossible to completely eliminate certain residual risk factors. The following hazards may arise and the operator should pay special attention to avoid the following:

- Injury caused by thrown-off particles
  - Metal or abrasive particles may enter the eyes and cause severe permanent damage. Wear goggles approved for grinding operations whenever you use the product.
- Injury caused by vibration
  - Limit exposure. See Risk Reduction.
- Injury caused by dust
  - Wear appropriate dust control mask with filters suitable for protecting against particles from the material being worked on and abrasive particles from the grinding disc. Do not eat, drink, or smoke in the work area. Ensure adequate ventilation.
- Injury from contact with the grinding disc
  - The disc and workpiece will become hot during use. Wear gloves when changing discs or touching workpiece. Keep hands away from the grinding area at all times. Clamp the workpiece whenever possible.
- Injury caused by noise
  - Prolonged exposure to noise will increase the risk of hearing damage, and the effects are cumulative. When using power

tools for any extended period of time, wear hearing protection.

⚠ **WARNING!** Injuries may be caused or aggravated by prolonged use of a tool. When using any tool for prolonged periods, ensure you take regular breaks.

RISK REDUCTION

It has been reported that vibrations from handheld tools may contribute to a condition called Raynaud's Syndrome in certain individuals. Symptoms may include tingling, numbness and blanching of the fingers, usually apparent upon exposure to cold. Hereditary factors, exposure to cold and dampness, diet, smoking, and work practices are all thought to contribute to the development of these symptoms. There are measures that can be taken by the operator to possibly reduce the effects of vibration:

- Keep your body warm in cold weather. When operating the product, wear gloves to keep the hands and wrists warm. It is reported that cold weather is a major factor contributing to Raynaud's Syndrome.
- After each period of operation, exercise to increase blood circulation.
- Take frequent work breaks. Limit the amount of exposure per day.

If you experience any of the symptoms of this condition, immediately discontinue use and see your doctor about these symptoms.

SPECIFIED CONDITIONS OF USE

The angle grinder is intended to be used only by adults who have read and understood the instructions and warnings in this manual and can be considered responsible for their actions. The angle grinder is designed for grinding and cutting metals and cutting concrete. Only appropriate grinding or cutting discs and related guards (grinding guard or cutting guard) as described in the product specification section of this manual should be fitted to the angle grinder. The angle grinder is designed for handheld use; it is not to be mounted onto a fixture or workbench.

Do not use the product in any way other than those stated for intended use.

BATTERIES

Battery packs which have not been used for some time should be recharged before use.

Temperatures in excess of 50°C (122°F) reduce the performance of the battery pack. Avoid extended exposure to heat or sunshine (risk of overheating).

The contacts of chargers and battery packs must be kept clean.

For an optimum life-time, the battery packs have to be fully charged, after used.

To obtain the longest possible battery life remove the battery pack from the charger once it is fully charged.

For battery pack storage longer than 30 days:

Store the battery pack where the temperature is below 27°C and away from moisture.

Store the battery packs in a 30% - 50% charged condition.

Every six months of storage, charge the pack as normal.

TRANSPORTING LITHIUM BATTERIES

Lithium-ion batteries are subject to the Dangerous Goods Legislation requirements.

Transportation of those batteries has to be done in accordance with local, national and international provisions and regulations.

- The user can transport the batteries by road without further requirements.
- Commercial transport of Lithium-Ion batteries by third parties is subject to Dangerous Goods regulations. Transport preparation and transport are exclusively to be carried out by appropriately trained persons and the process has to be accompanied by corresponding experts.

When transporting batteries:

- Ensure that battery contact terminals are protected and insulated to prevent short circuit.
- Ensure that battery pack is secured against movement within packaging.
- Do not transport batteries that are cracked or leaking.

Check with forwarding company for further advice.

BATTERY PACK PROTECTION

The battery pack has overload protection that protects it from being overloaded and helps to ensure long life. Under extreme stress the battery electronics switch off the machine automatically. To restart, switch the machine off and then on again. If the machine does not start up again, the battery pack may have discharged completely. In this case it must be recharged in the battery charger.

LED INDICATOR

LED	Status
Flashing	Overload protection is activated. To reactivate tool, remove battery and reinsert to reset.
On	Kickback protection is activated. Tool will start without having to remove the battery.

MAINTENANCE

The ventilation slots of the machine must be kept clear at all times.

Use only AEG accessories and AEG spare parts. Should components need to be replaced which have not been described, please contact one of our AEG service agents (see our list of guarantee/service addresses).

If needed, an exploded view of the tool can be ordered. Please state the Article No. as well as the machine type printed on the label and order the drawing at your local service agents or directly at:

Techtronic Industries Australia Pty Ltd

PO Box 1065
Mount Waverley VIC 3149
Tel. no. 1300 234 797
Australia

Techtronic Industries N.Z. Limited

PO Box 12-806
Penrose AUCKLAND 1642
Tel. no. 0800 234 797
New Zealand

SYMBOLS

⚠	Safety alert
n	Rated speed
V	Volts
⎓	Direct current
	Regulatory Compliance Mark (RCM). Product meets applicable regulatory requirements.
	Please read the instructions carefully before starting the machine.
	Always wear goggles when using the machine.
	Always wear gloves when using the machine.
	Remove the battery pack before starting any work on the machine.
	Accessory - Not included in standard equipment, available as an accessory.
	Do not dispose of electric tools together with household waste material. Electric tools and electronic equipment that have reached the end of their life must be collected separately and returned to an environmentally compatible recycling facility.

AEG

www.aegpowertools.com.au
www.aegpowertools.co.nz

Techtronic Industries Australia Pty Ltd
31 Gilby Road, Mount Waverley, VIC 3149
Melbourne, Australia

Techtronic Industries N.Z. Limited
2 Landing Drive, Mangere
Auckland, 2022, New Zealand

961096412-01A